E Thermal Storage Walls

E.1 INTRODUCTION

In a number of ways, thermal storage walls combine features of direct-gain systems and thermosiphoning collectors. As in direct-gain systems, large amounts of thermal mass are placed in direct sunlight; and as in thermosiphoning systems, heat flow to the room can be controlled.

Thermal storage walls, however, compensate for some of the disadvantages of the other two systems. Mass is used very efficiently because it is directly in the sun, in contrast to thermosiphoning systems which must rely on mass that is remote from the sun. Because the mass is placed between the glass and the space to be heated, the large fluctuations in room temperature sometimes associated with direct-gain systems are eliminated.

Per unit of thermal storage mass used, the thermal storage wall makes best use of the material because the temperature swing in the material is greatest. Even so, temperature swings in the heated space can be relatively small.

E.2 THERMAL STORAGE WALL SYSTEMS

E.2.a BASIC DESIGNS

There are two types of thermal storage walls. One uses foot-thick, heavy masonry material (concrete, adobe, brick, etc.). The wall is painted a dark color and heats as the sunlight passes through the glazing and strikes it. Usually, but not necessarily, vents are placed at the bottom and top. I vents are used, cool room air is drawn in at the bottom, rises in the warm space between the mass and the glazing, and enters the room through the top vents. Such systems are usually called "Trombe walls," after Felix Trombe of Odeillo, France, who—with architect Jacques Michel—substantially boosted their development in the 1960s by building several homes in the Pyrenees that incorporated this design. The concept was originated and patented in the 1880s by E. L. Morse of Salem, Massachusetts. His walls, complete with top and bottom dampers, used glass-covered slate.

The second general type of thermal storage wall uses water. The waterwall represented in figure E-1 uses

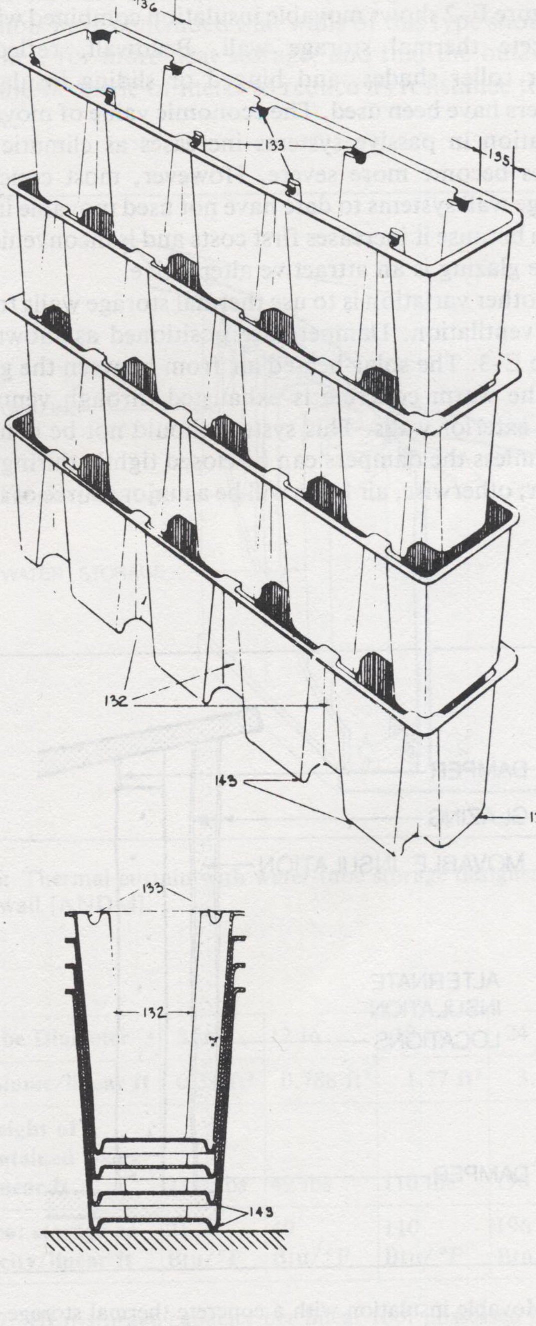

E-1: Waterwall modules designed by One Design [MAL].

modules of cast fiberglass—reinforced polyester. The black modules are about 8 feet long, 2 feet high, and 16 to 20 inches wide. They nest inside one another during transport from factory to site [EEE].

In some instances, waterwalls are more convenient than concrete thermal walls. Because water maintains a more uniform temperature throughout the thickness of the wall, its absorption surface remains at a lower temperature than the absorption surfaces of Trombe walls. This is the primary reason that waterwalls are slightly more efficient than Trombe walls.

E.2.b DESIGN VARIATIONS

Figure E–2 shows movable insulation combined with a concrete thermal storage wall. Beadwall, reflective Mylar roller shades, and hinged or sliding insulating shutters have been used. The economic value of movable insulation in passive systems increases as climatic extremes become more severe. However, most concrete storage wall systems to date have not used movable insulation because it increases first costs and is inconvenient. Triple glazing is an attractive alternative.

Another variation is to use thermal storage walls to induce ventilation. Dampers are positioned as shown in figure E–3. The solar-heated air from between the glass and the warm concrete is exhausted through vents in other exterior walls. This system should not be considered unless the dampers can be closed tightly during the winter; otherwise, air leaks will be a major source of heat loss.

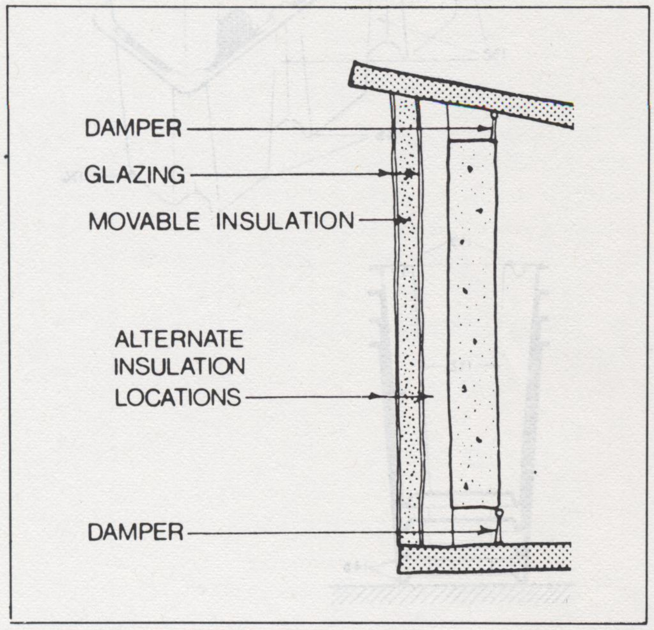

E–2: Movable insulation with a concrete thermal storage wall (set for nighttime operation) [AND–4].

An alternative to a solid concrete wall facing south is vertical solar louvers, a set of rectangular, masonry columns situated directly behind south-facing glazing and oriented in the southeast-northwest direction. See figure

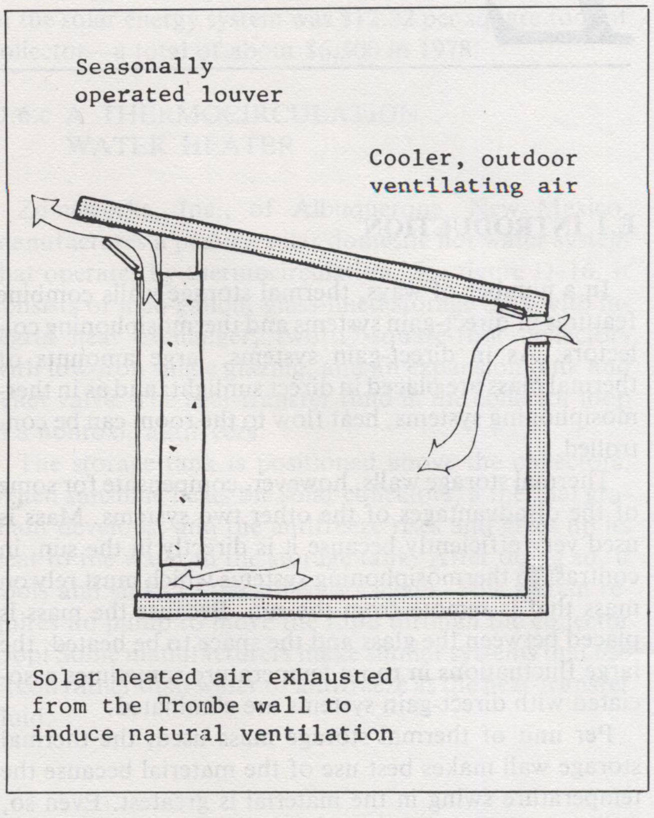

E–3: Thermal storage wall—cooling [AND–4].

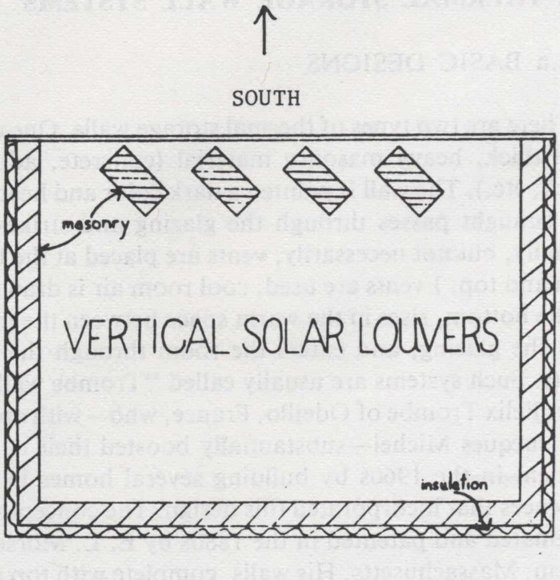

E–4: Vertical solar louvers [BIE].

E-4. This system combines features of direct gain and Trombe walls. It can quickly heat the building in the early morning through direct gain, and the wall columns can absorb afternoon heat from the sun. The system also permits access to the glazing system for cleaning and maintenance and readily allows use of movable insulation between the glazing and the walls. Notice that the heat wave through the concrete louvers will be delayed by several hours because of their westerly orientation. The main disadvantage of this system is that the louvers are situated in the living space [BIE].

Figure E-5 is an example of one type of waterwall. This system, whose trade name is Drumwall, was first developed by Steve Baer of Zomeworks, Inc. It uses 55-gallon drums filled with water. Insulating panels, hinged at the base of each wall, cover the single layer of glass at night to reduce heat loss. When the panels are open and lying flat on the ground, the aluminum surface reflects additional solar irradiation onto the drums. During the summer, the panels in their closed position shade the glass.

The waterwall in figure E-6 uses water-filled vertical tubes. As an added means of comfort control, the tubes are separated from the living space by a wall through which room air can pass and sweep past the warm tubes. A fan controls the flow of air. A thermal curtain closes between the tubes and the glass at night to reduce heat loss.

Figure E-7 gives the heat-storage capacity for cylindrical tubes of various diameters. Corrugated, galvanized culverts and fiberglass-reinforced polyester are the most commonly used cylinders.

To overcome the high cost of concrete—and at the same time store large amounts of heat—Wayne and Susan Nichols, designer/builders in Santa Fe, New Mexico, developed a "water-loaded Trombe wall." It consists of cast-concrete tanks, 4 feet by 8 feet by 10 inches (outside dimensions); the tank wall is 2 inches thick, leaving a 6-inch cavity. After the wall is installed, a plastic bag, filled with water and then sealed, is placed in the cavity. At night, the single-glazed wall is covered outside by a Steve Baer-style hinged, insulating, reflecting shutter.

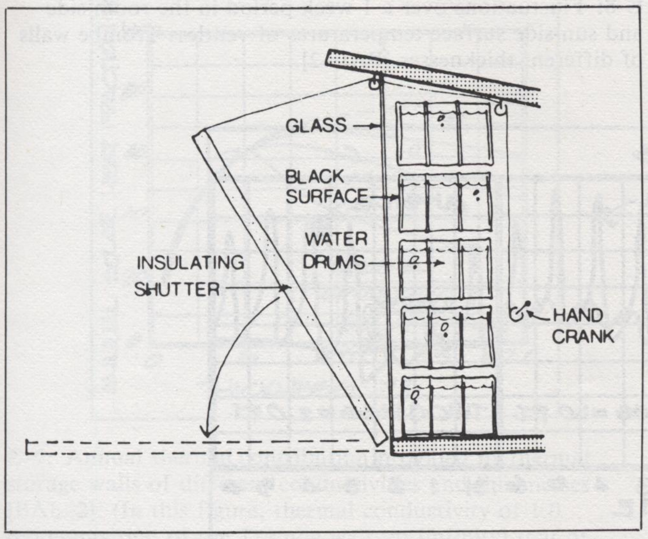

E-5: Hand-operated insulating shutter with water-drum storage designed by Zomeworks [AND-4].

Data taken on the wall indicate that the thermal resistance of the outside 2-inch-thick concrete wall is too great during the charging mode. Temperature differences of 40 Fahrenheit degrees are observed across this wall. Temperature differences across the water and inner wall are small (5 Fahrenheit degrees or less). The Nichols have concluded that walls of this type should be thicker, for more heat storage, and that the outer wall should be made of metal to reduce its resistance to heat flow.

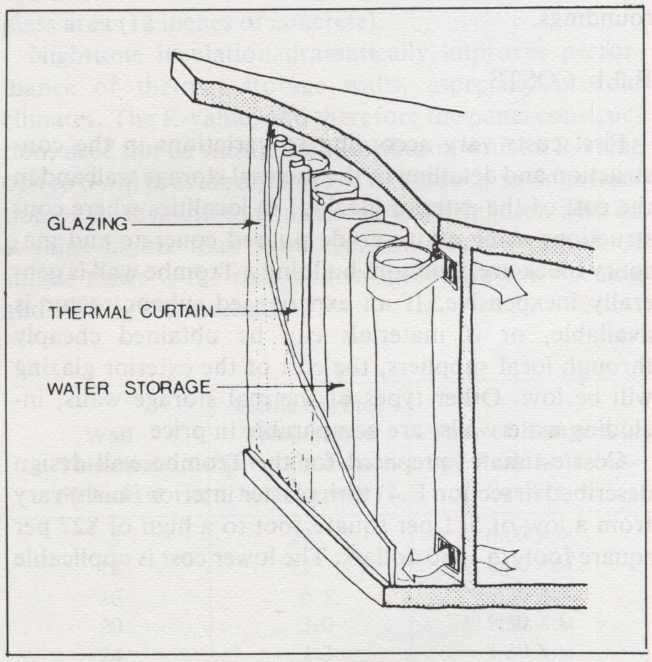

E-6: Thermal curtain with water-tube storage designed by Kalwall [AND-4].

Tube Diameter	8 in.	12 in.	18 in.	24 in.
Volume/linear ft	0.34 ft^3	0.788 ft^3	1.77 ft^3	3.14 ft^3
Weight of contained water /linear ft	21.7 lbs	49 lbs	110 lbs	196 lbs
Heat storage capacity/linear ft	21.7 Btu/°F	49 Btu/°F	110 Btu/°F	196 Btu/°F

E-7: Heat-storage capacity per linear foot possessed by cylindrical containers of water with different tube diameters.

E.3 DESIGN FUNDAMENTALS

E.3.a BUILDING INTEGRATION

Thermal storage walls provide temperature stability in passive buildings and are appropriate for a variety of building types. The air vents for thermocirculation somewhat control the timespan over which heat is delivered to the space. Since the wall is opaque, it eliminates the excessive glare associated with direct sunlight. Ultraviolet damage to goods and furnishings is avoided—an especially significant advantage in retail stores and commercial buildings.

Trombe walls are fire-resistant. They provide structural security for warehouses and manufacturing plants and structural ability in high-rise constructions. Finish details can be very rough, to suit manufacturing and industrial applications, or more polished to fit residential designs. Windows placed at suitable intervals supply daylighting and offer occupants views of their surroundings.

E.3.b COSTS

First costs vary according to variations in the construction and detailing of the thermal storage wall and in the cost of the exterior glazing. In localities where constructions using above-grade poured concrete and masonry block are common, building a Trombe wall is generally inexpensive. If an experienced subcontractor is available, or if materials can be obtained cheaply through local suppliers, the cost of the exterior glazing will be low. Other types of thermal storage walls, including waterwalls, are comparable in price.

Cost estimates prepared for the Trombe wall design described in section E.4 (with plaster interior finish) vary from a low of $11 per square foot to a high of $27 per square foot, in 1980 dollars. The lower cost is applicable to retrofit situations, where a mass wall already exists and inexpensive glazing is used. To obtain a true net additional cost for this type of passive solar heating, the cost of conventional construction that is replaced by the thermal wall should be subtracted. Since the most expensive conventional residential exterior wall, including insulation and interior finish, usually runs between $2.50 and $4 per square foot, the true first cost of the Trombe wall may be estimated at $9 to $25 per square foot (all dollar amounts in 1980 dollars).

Operating costs for these walls are zero, and little or no maintenance is required. In many climates, maintenance for thermal walls is comparable to that for vinyl siding: occasional washing (every 2 to 4 years) of the exterior glazing is advised. Harsh industrial environments may degrade plastic glazing; ''refinishing'' coatings are available from leading manufacturers and (in such situations) may be applied on a 3- to 5-year basis.

E.3.c THERMAL PERFORMANCE

Thermally, these walls perform reliably. Heat losses, even under the worst conditions, are not very different from those permitted by conventionally constructed walls. Their overall U-value of 0.23 (reverse thermocirculation prevented) enables them to meet ASHRAE's energy performance standards for single-family residences located in climates that do not exceed 5,200 degree days. If solar gains are considered, the thermal walls are net heat producers.

Solar energy collection takes place at low to moderate temperatures (generally not exceeding 150°F for the outside surface of Trombe walls, and even lower for waterwalls). This provides a high level of instantaneous efficiency (generally comparable to that of active-system flat-plate collectors). Except in the Deep South, the ver-

E–8: Fluctuations over a 1-week period in the room-side and sun-side surface temperatures of ventless Trombe walls of different thicknesses [BAL–2].

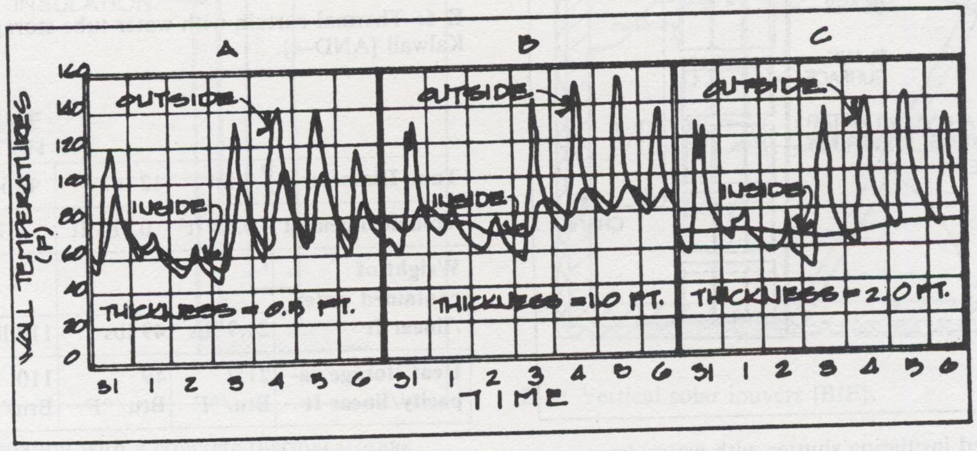

tical, south-wall orientation results in good winter heating performance and minimal summer overheating. Air is delivered through the vents and to the room at moderate temperatures (generally not exceeding 90°F—or 20 to 30 Fahrenheit degrees higher than the room air entering the space between the glazing and the wall). Normal airflow is approximately 1 cubic foot per minute per square foot of wall.

Although there are many ways to assess the relative benefits of different thicknesses of thermal storage walls, 10 to 16 inches is the optimum range of thickness for both Trombe walls and waterwalls.

Figure E–8 shows the calculated 7-day temperature fluctuations of the room-side and sun-side surfaces of three ventless Trombe walls in Los Alamos, New Mexico. The ratio of the building load to the glass area is 0.5 Btu/hr/ft²/°F. One wall is 6 inches thick, another 12 inches thick, and the third 24 inches thick. The daily fluctuations on the inside wall surface are markedly different for the three cases. They are very pronounced (45 Fahrenheit degrees) for the thin wall and nonexistent for the thick wall. The long-term effect of two days of cloudy weather is observed on the inside of the thick wall as a 10-Fahrenheit-degree variation.

The amount of thermal energy contributed annually by walls of different thicknesses is not markedly different. See figure E–9. The 1-foot-thick wall is the best of the three, giving a net annual solar-heating contribution of 68%. Although the net annual contributions of thin and thick walls are nearly the same, the fluctuations in room temperature are smaller as wall thickness increases. Notice that the solar fraction continues to increase (although by progressively minute amounts) for waterwalls of increasing thickness. (The solar fraction for waterwalls is represented by the curve for wall materials of infinite conductivity.)

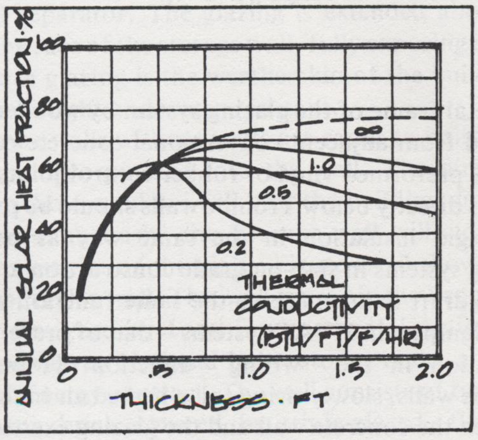

E–9: Annual thermal contribution provided by thermal storage walls of different conductivities and thicknesses [BAL–2]. (In this figure, thermal conductivity of 1.0 represents that of the Trombe wall, ∞ [infinity] that of water, and 0.5 (probably) that of a common concrete block wall.)

Trombe walls can be made different thicknesses to produce different time delays in the arrival of the heat wave from the hot, sunny side to the room side. In general, a building can be heated by direct gain or by a thermosiphoning system during the day and then by the thermal storage wall at night. Figure E–10 shows variations in inside surface temperature swing and in time delay between the irradiation and the occurrence of peak temperatures on the inside surface, based on differences in wall thickness. These representations are for a double-glazed solid concrete wall during a normal sunny winter day.

Figure E–11 shows the solar savings fraction (in various cities) for Trombe walls in passive systems with a load collector ratio (*LCR*) of 24. (The *LCR* in this case is the building heat loss coefficient (*BLC*) divided by the Trombe wall area (*A*).) Three glazing treatments are shown: double glazing, double glazing with R9 night insulation, and triple glazing. The calculations are for a Trombe wall with thermal storage mass of 30 Btu/°F/ft² glass area (12 inches of concrete).

Nighttime insulation dramatically improves performance of thermal storage walls, especially in cold climates. The R-value, and therefore the panel construction, need not be substantial. Insulation with an R-value of 4 to 6 will provide about 75% of the solar savings fraction of R9 insulation. Only rarely will insulation with an R-value higher than 9 be economically warranted. A simple timer is the only control necessary for opening and closing the insulation.

Wall Thickness (in inches)	Inside Surface Temperature Swing (in Fahrenheit degrees)	Time of Temperature Peak at Inside Surface
8	27	6:00 P.M.
12	13	8:00 P.M.
16	6.5	10:30 P.M.
20	3.0	1:30 A.M.
24	1.3	4:30 A.M.

E–10: Characteristics of solid concrete walls equipped with outside double glazing (figures are for sunny days).

City:	Double-Glazed	Double-Glazed With R9 Nighttime Insulation	Triple-Glazed
Boston	0.25	0.41	0.30
Denver	0.50	0.67	0.56
Madison	0.19	0.37	0.26
Nashville	0.35	0.46	0.41
Seattle	0.29	0.45	0.35

E–11: Effect on solar savings fraction of different forms of insulation applied to a Trombe wall with *LCR* = 24 in five cities.

In nearly all climates, thermal walls should have at least two glazings. An alternative to movable insulation in cold climates is an additional glazing layer. Movable insulation with more than two glazings is rarely economical. Multiple glazings have a greater effect on performance at relatively high solar load fractions than they have at lower ones.

E.4 A BASIC TROMBE-WALL CONFIGURATION

Although a variety of Trombe walls have been built, and although the design can be adjusted for specific climates, the design in figure E–12 is basic and cost-effective for heating in most of the United States. The modular dimensions and particular construction details used here should help to simplify the tasks of designers and builders. Although this drawing has been prepared to show many details and specific dimensions, the exact configuration of a Trombe wall can vary considerably from this model without adversely affecting its performance.

E.4.a MATERIALS

The basic design shown in figure E–12 consists of an outer glazing system, an inner thermal-energy storage wall, backdraft dampers for airflow control, and various optional trim and structural integration details.

The outer curtain-wall/window-wall system consists of aluminum framing in combination with two layers of glass or translucent or semitransparent low-cost plastic. Unlike in a direct-gain passive system, views *out* are not possible; views *in,* showing the rough concrete wall surface, may be undesirable. Maximum system temperatures, even under stagnation conditions, range from 150° to 180°F, well below the stagnation temperatures of metal flat-plate collectors. Heat-resistant plastics easily withstand these lower-range maximum temperatures to which Trombe wall glazing is subjected.

The thermal storage wall is concrete—either cast in place or laid with solid concrete masonry units and concrete mortar. The concrete used should be regular stone concrete (about 140 lbs/ft^3); lightweight aggregates should not be used. When (as in most cases) the Trombe wall serves as both a heat-storage wall and a structural wall, the necessary reinforcing wire or bar and any structural anchors can be added without altering the wall's solar performance characteristics. In general, the junctions between the inner storage wall and the foundation, floors, adjacent side walls, and roof should be treated as normal construction situations. A primary exception to this is the extreme importance of eliminating or changing details that would permit direct conduction of heat to masonry and metal that are exposed to the weather. For this reason, the concrete wall is thermally isolated from the metal frame of the glazing system by wooden blocking and from adjacent conventional concrete construction by preformed vinyl or rubber control joints. Foundations directly below Trombe walls should be protected with rigid insulation in the same way as perimeter heating systems in slab-on-grade construction are.

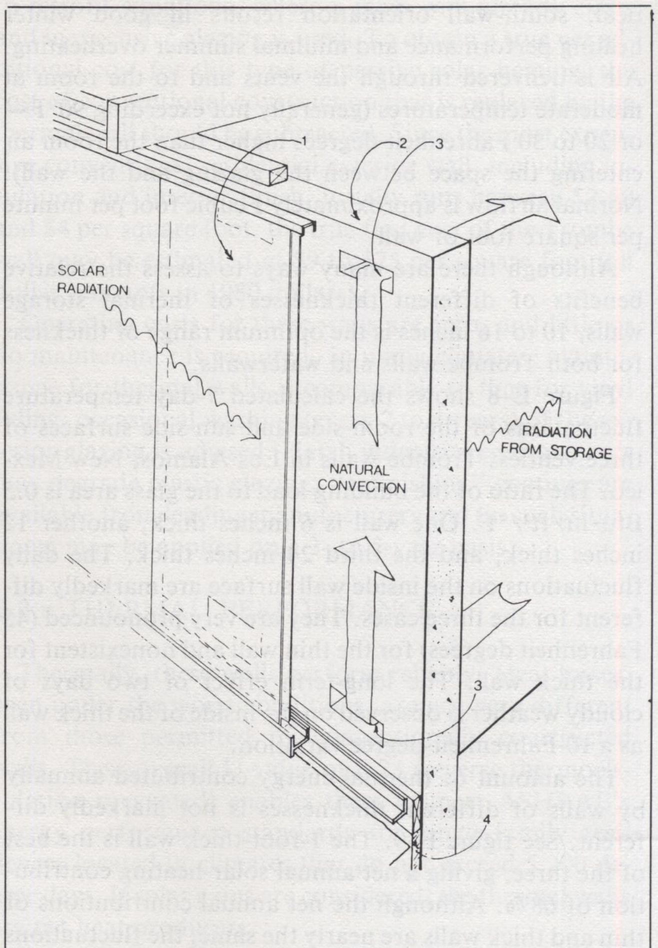

1 Exterior Glazing System
2 10-Inch-Thick Concrete Wall
3 Air Vents
4 Foundation Insulation

E–12: Trombe wall design [AND–4].

Backdraft dampers serve the same function as backdraft dampers in HVAC systems—that of preventing air circulation in the ''wrong'' direction. However, in Trombe walls, slowly rising solar-heated air in the cavity between the concrete wall and the glazing exerts a slight pressure to open them, while falling cool air exerts a slight reverse pressure that forces them to close. Dampers are commercially available or can be custom-fabricated. In many cases, as discussed earlier, vents need not be used.

The interior finish on the Trombe wall (if any) must not prevent the wall's heat from reaching the room. A conventional architectural concrete finish, such as exposed aggregate, or a sandblasted or brushed surface may be used. The surface may be sealed and painted any color. A plastic skim coat or plaster may be used. Sheet materials, however, such as plywood or hardwood paneling, should not be used. Gypsum board can be used only if excellent, continuous contact between the board and the wall is maintained—a difficult task indeed.

The exterior surface should be cleaned with a masonry cleaner prior to painting. Although any dark color may be used on particularly rough-textured walls, flat black paint is preferred.

E.4.b DESIGN

The concrete storage wall in this basic design is 10 inches thick and nominally 8 feet high. A 7-foot, 10-inch height is suitable for cast-in-place construction. Walls can be of any length. Vent holes, if used, should be provided at intervals along the entire length. Vent holes in concrete block walls are nominally 3⅝ inches by 15⅝ inches. Single blocks are left out of lower and upper courses. In poured concrete walls, 4-by-15 inch openings are preferred. The total cross-sectional area of the vents (upper plus lower) need not be greater than 1% of the total wall area. The upper and lower vents are placed as close to the ceiling and floor as is practical; in no case should the vertical distance between vents be less than 6 feet. Decorative grilles or registers are installed over these openings on the interior face. The lower grille includes the backdraft damper.

The exterior glazing system is mounted 3 to 4 inches away from the outer, darkened concrete surface. At the place where the aluminum glazing supports are attached to the wall, wood or other insulating material is used as a thermal separator. The glazing is extended above and below the face of the storage wall, fully exposing it to the sun. Since glazing is the weatherskin of the building, it must be airtight and water-resistant.

Trombe walls without vents are easier to build if windows are incorporated into the wall. The direct gain through these windows will heat the building during the day. Simultaneously, the Trombe wall will store solar heat for use during the night. Figure E–13 shows an example of such a wall. This wall is used in the Brookhaven House, designed by Total Environmental Action, Inc., for Brookhaven National Laboratories under a Department of Energy contract. The wall consists of two layers of paving brick covered by triple-glazed, float-glass panels mounted in milled wood strips. In the summer, when the sun is high in the sky, the wall can be shaded by a retractable canvas awning.

E.4.c CONSTRUCTION AND INSTALLATION

Building the Trombe wall described in figure E–12 normally requires only general contracting skills. Depending on contractor preference, the installation of the glazing system usually can be handled by the manufacturer's representative. This enables the building's owner to obtain a better warranty on its weather-tightness. The storage wall should be constructed at the lowest cost possible, given the thermal, structural, and interior finish requirements outlined above. If the contractor or subcontractors normally use poured concrete only in foundation work or if multistory installations are planned, the solid masonry-unit wall is preferable.

Work scheduling presents no problem if the contractor carefully reviews construction requirements in advance. The glazing system is usually fabricated to site dimensions; therefore, to avoid delays in closing the building, these dimensions should be established early in construction, and orders should be placed early for the glazing. Concrete finishing work may require having the appropriate trades on the job site at other than the normal times.

E.5 ADVANTAGES AND DISADVANTAGES OF THERMAL STORAGE WALLS

Advantages of thermal storage walls are:

- Glare and ultraviolet degradation of fabrics are not problems;
- Temperature swings in the living space are lower than with direct-gain or thermosiphoning systems; and
- The time delay between the absorption of radiant energy by the wall surface and delivery of the resulting heat to the interior space provides warmth in the evening when most houses need it.

Disadvantages of this type of system are:

- Two south walls—a glazed wall and a mass wall—are needed;
- Massive walls tend to be costly and are not generally used in modern residential construction (although thermal storage walls may be the least expensive way to achieve the required thermal storage, since they are compactly located behind the glass);
- The mass wall occupies valuable space within the building; and
- In cold climates, considerable heat is lost at night to the outside, from the warm wall through the glazing, unless the glazing is kept insulated at night—and movable insulation tends to be expensive and awkward.

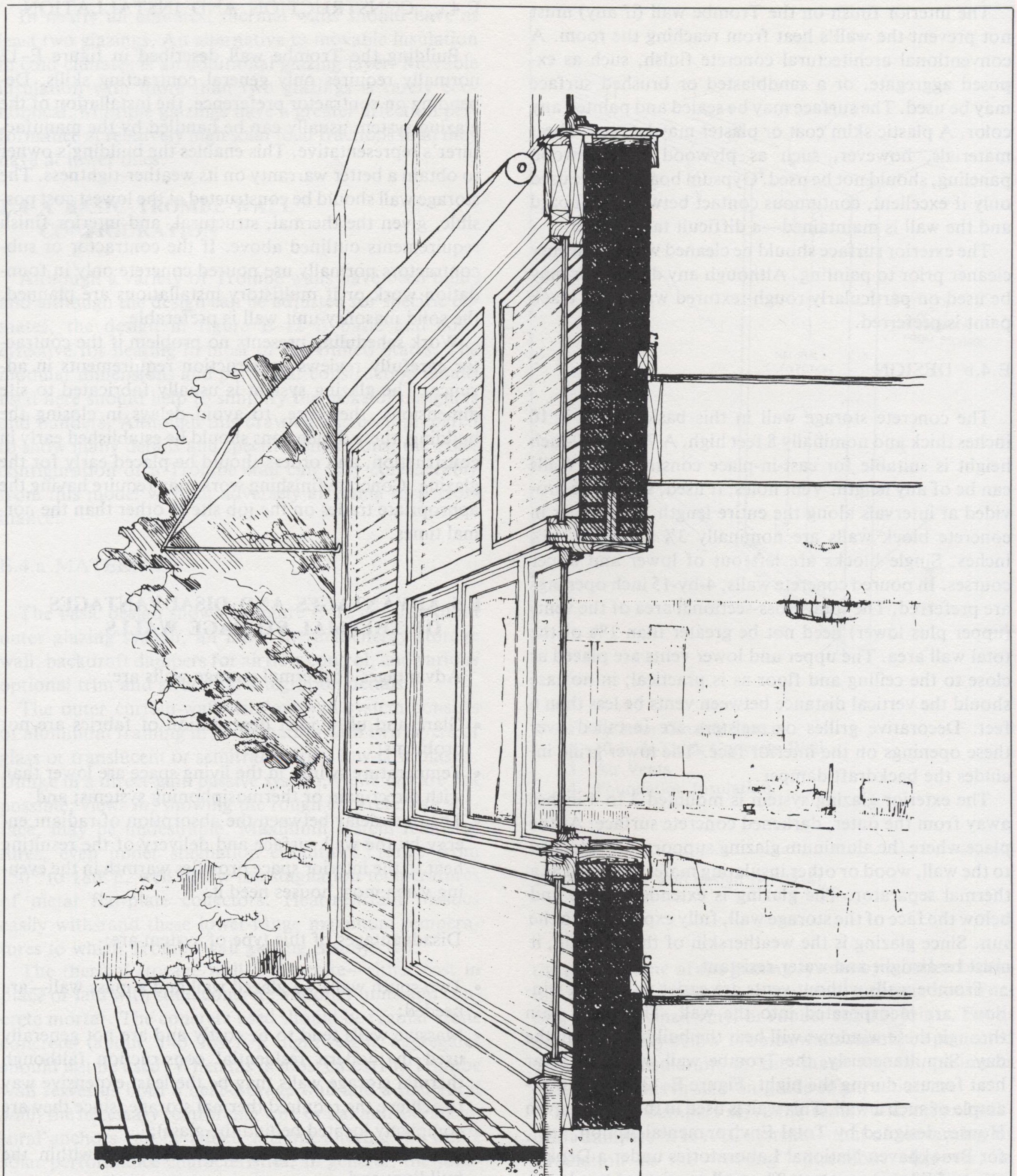

E–13: Trombe wall of the Brookhaven House; Upton, New York [TEA–2].

E.6 EXAMPLES OF THERMAL STORAGE WALLS

E.6.a BENEDICTINE MONASTERY; PECOS, NEW MEXICO

Ten miles south of Santa Fe, New Mexico, a 9,320-square-foot office/warehouse building for the book publishing operations of a Benedictine monastery combines direct gain with a Drumwall. See figure E–14.

The south surface is almost entirely glass; the window area is 1,356 square feet, with 440 square feet of Drumwall. The Drumwall consists of 138 water-filled oil drums enclosed in an insulated cabinet. The top of the cabinet is a counter-top work surface in the 2,660-square-foot offices. Heat passes by natural convection through vents in the cabinet, eliminating the need for fans.

Insulating panels are hinged to the exterior base of the wall. In the panels' louvered, horizontal position, they reflect additional solar radiation onto the Drumwall. In their raised position, they reduce heat loss. During the summer, they shade the wall.

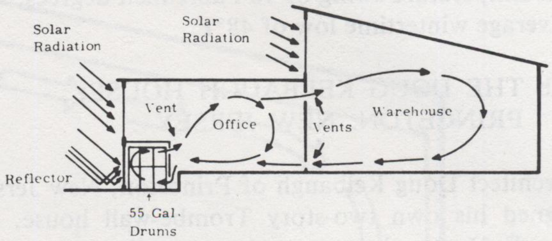

E–15: Schematic diagram of the Benedictine Monastery's office building/warehouse, showing the building's solar heating systems [SAN].

E–14: The Benedictine Monastery's office building/warehouse; Pecos, New Mexico [STR].

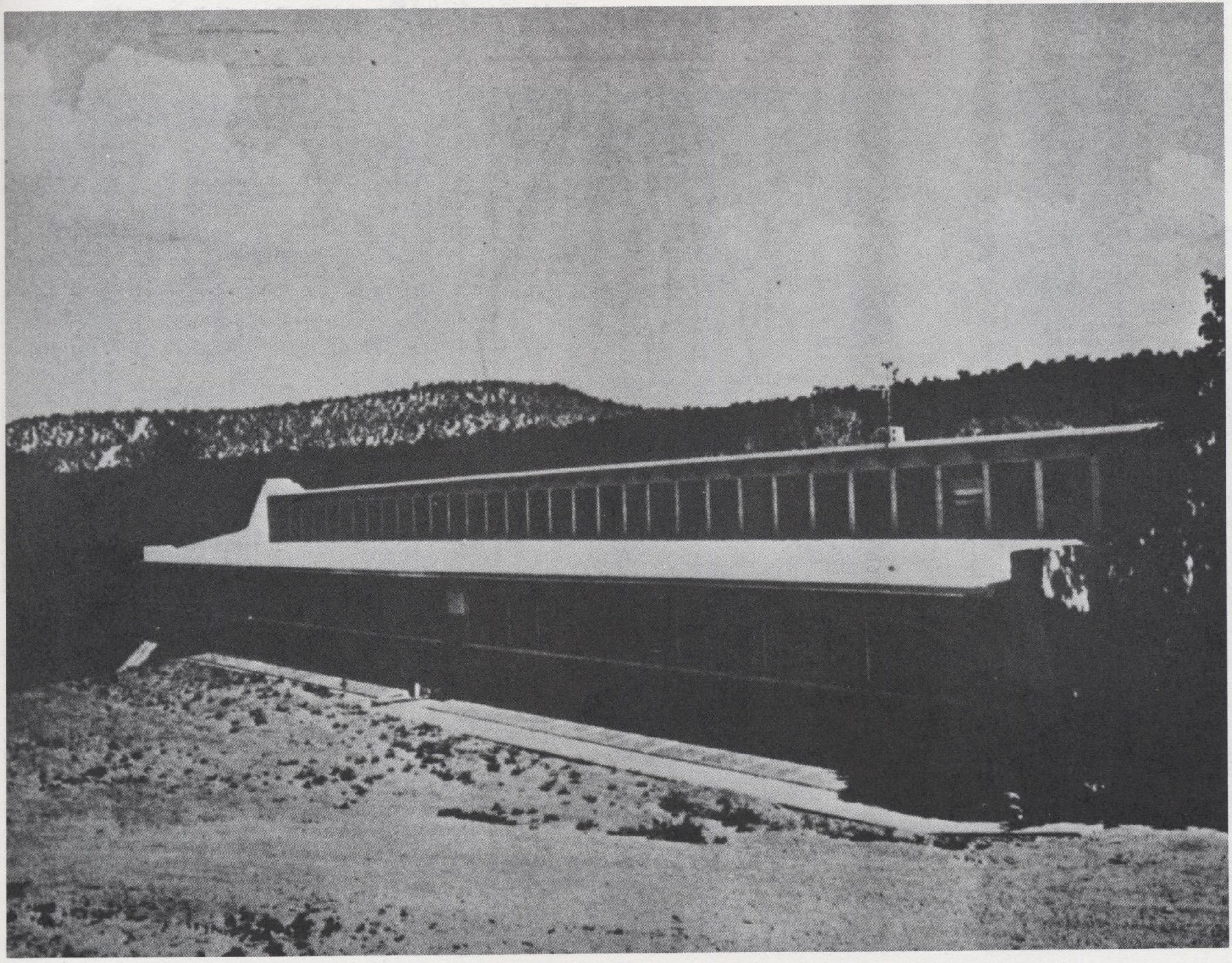

The 4,900-square-foot warehouse is heated by direct gain through clerestory windows. Excess warm air from the offices is occasionally vented into the warehouse. See figure E–15. The building is masonry with rigid foam insulation applied to the exterior surface.

The sun provides 90% of the building's heat. The office has a temperature swing of 15 Fahrenheit degrees, with an average wintertime low of 63°F. The warehouse has a temperature swing of 10 Fahrenheit degrees, with an average wintertime low of 48°F.

E.6.b THE DOUG KELBAUGH HOUSE; PRINCETON, NEW JERSEY

Architect Doug Kelbaugh of Princeton, New Jersey, designed his own two-story Trombe-wall house. See figure E–16. North, east, and west walls are standard wood frame constructions and have minimal window areas. Windows on the south side are incorporated into the Trombe wall. The Trombe wall also incorporates a standard, commercially available greenhouse. The total south wall collection area, including the greenhouse and a two-story Trombe wall, is 600 square feet. See figure E–17.

As computed using conventional heat-loss analyses, the design load is 65,000 Btu/hr. The empirically determined load is 56,300. Estimated consumption of gas in the backup heating system was 121 ccf (hundred cubic feet) during a 4,500 degree-day winter. Actual consumption during its first winter of operation (with 4,500 degree-days) was 338 ccf; actual consumption during its second year (with 5,556 degree days), was 246 ccf.

Indoor temperature swings were 3 to 6 Fahrenheit degrees during a 24-hour cycle. The seasonal low and high temperatures were 58° and 68°F downstairs and 62° and 72°F upstairs. The estimated averages were 63°F downstairs and 67°F upstairs. (Actual comfort levels were somewhat higher because of the radiating warmth from the Trombe wall.)

In addition to the vents at the top of the Trombe wall, four fans are used to ventilate the wall during the summer. The wall, in turn, ventilates the entire house by pulling air across the rooms from windows on the north wall [KEL-1], [KEL-2], [KEL-3].

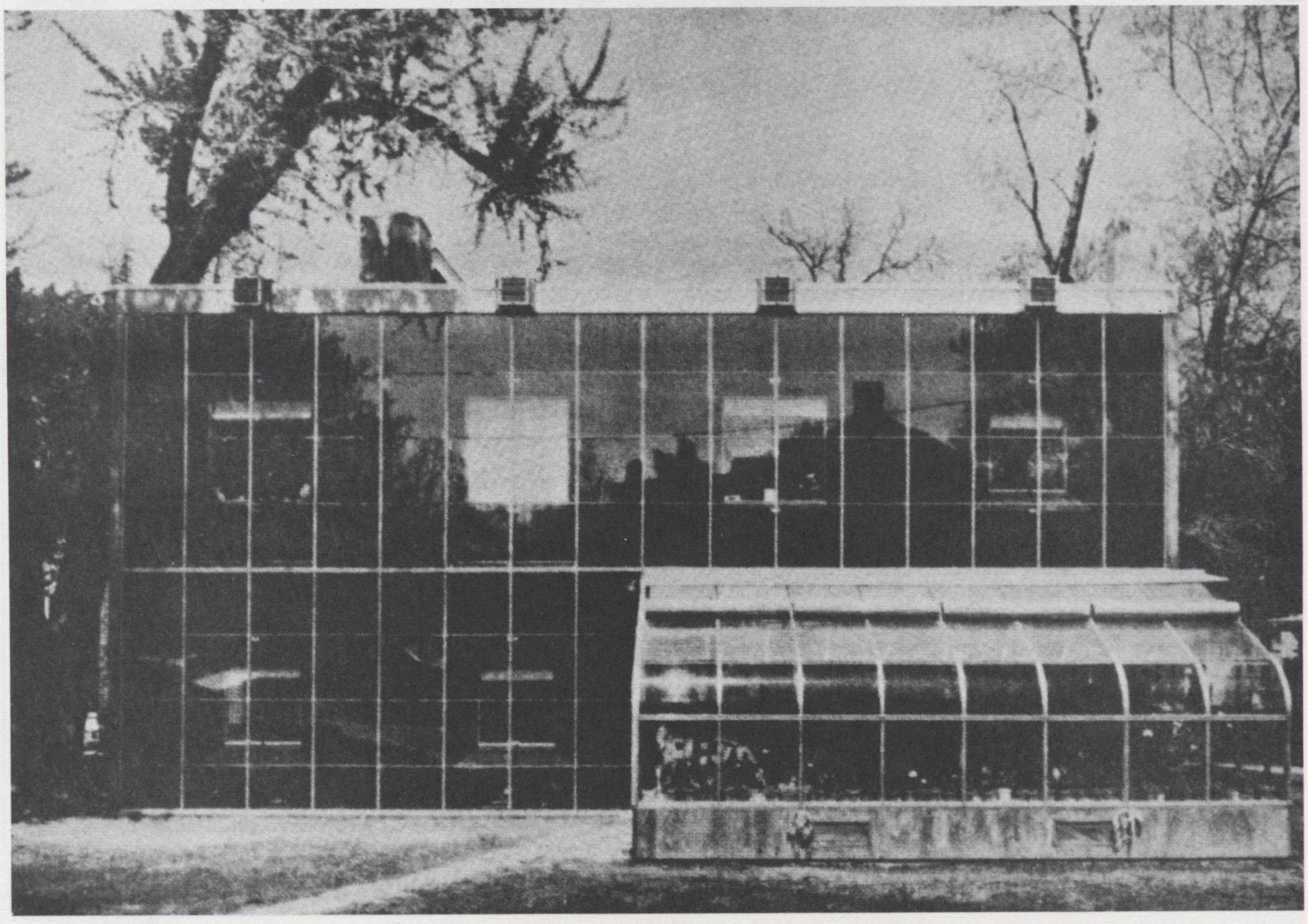

E–16: South elevation of the Doug Kelbaugh House; Princeton, New Jersey [KEL–1].

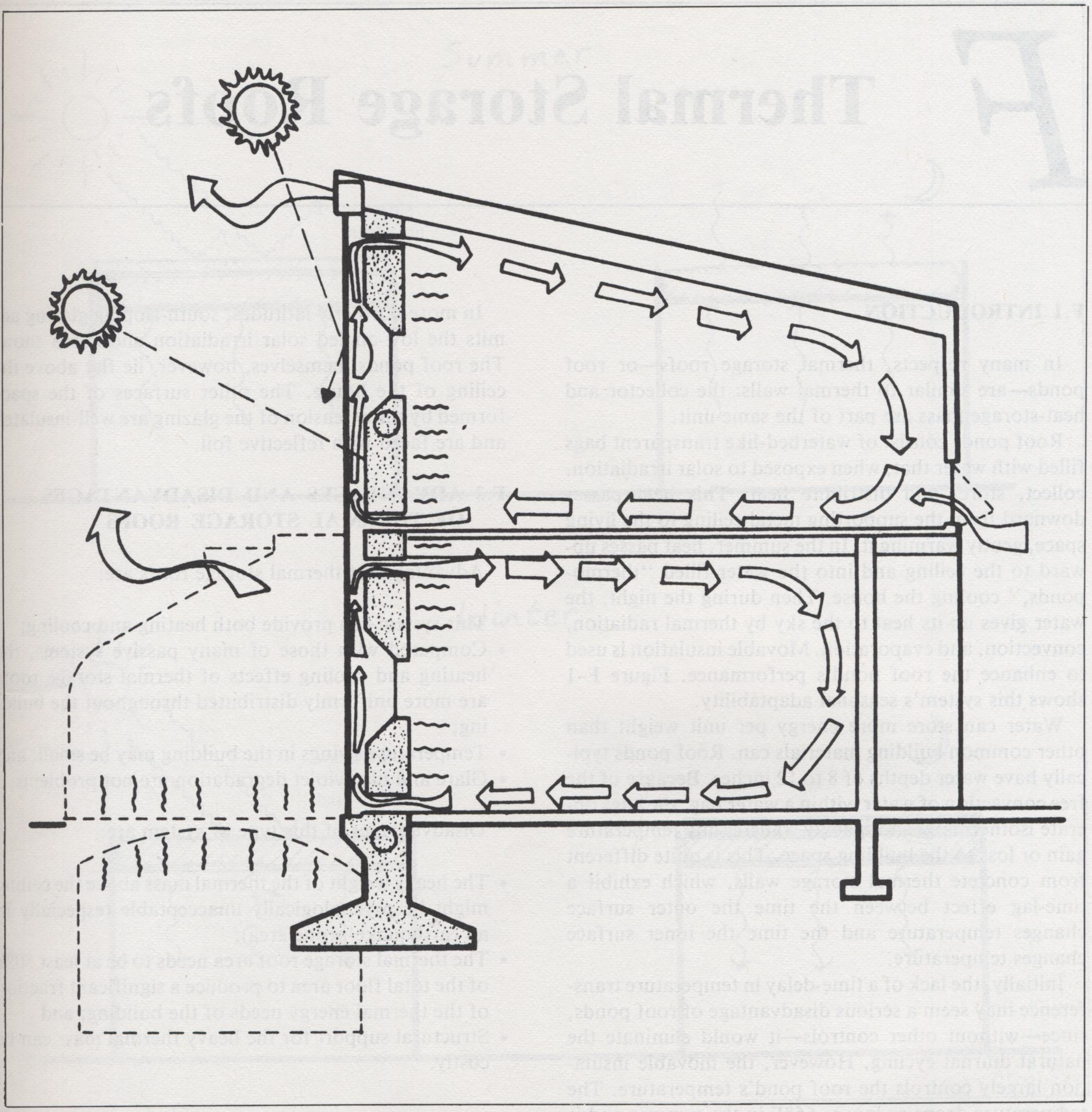

E-17: Schematic diagram of the Doug Kelbaugh House, showing heat flows [SAN].