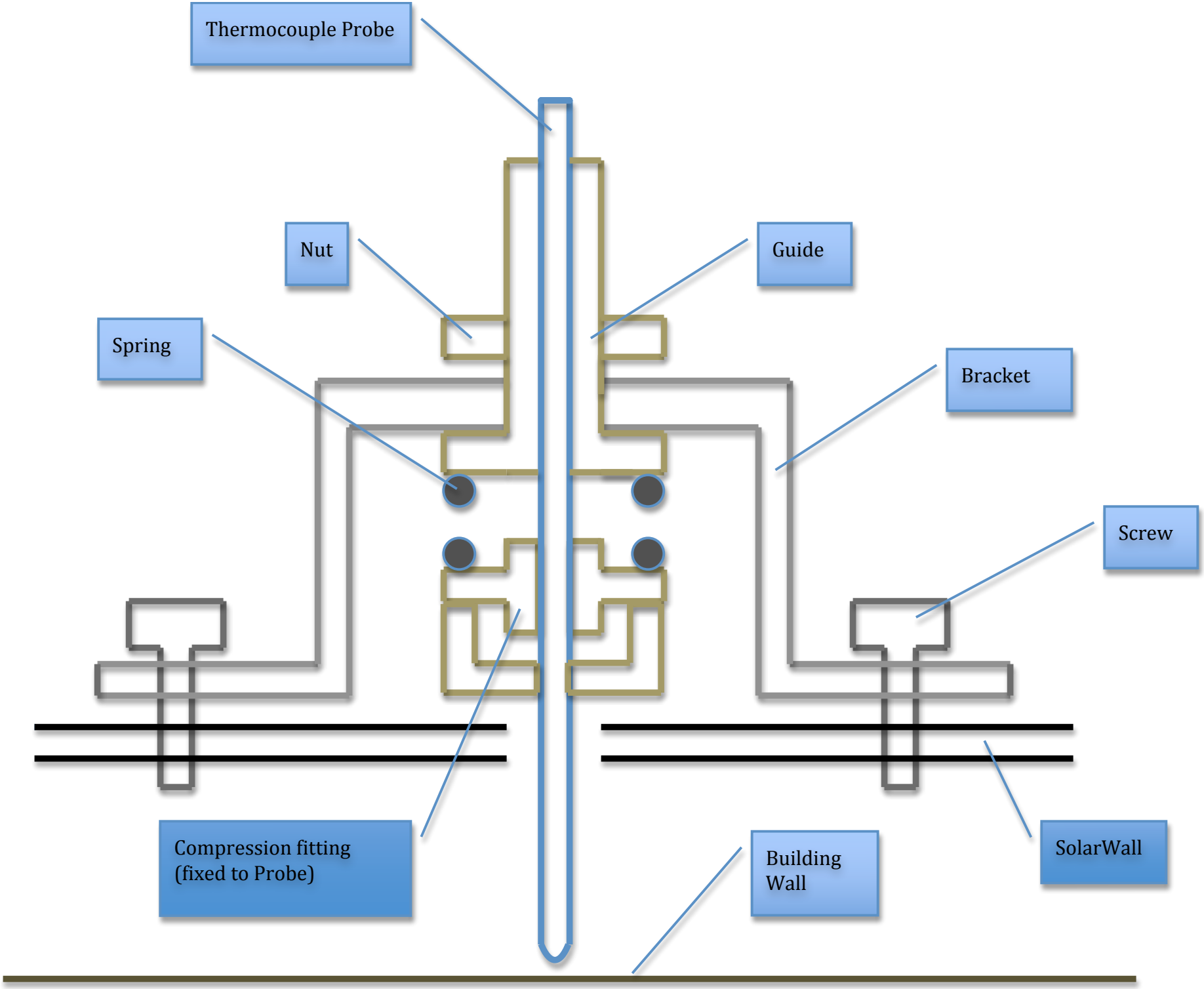
Thermocouple Probe
Nut
Guide
Spring
Bracket
Screw
Compression fitting
(fixed to Probe)
Building
Wall
SolarWall