Instructions
for Operation
and Maintenance

"ROCKWELL" HARDNESS TESTER

Models JR and JS

DB-44

WILSON

MECHANICAL INSTRUMENT CO., INC.

General and Sales Office: 230 Park Avenue, New York 17, N. Y.
Factory: 929 Connecticut Avenue, Bridgeport 2, Conn.

An Associate Company of American Chain & Cable Company, Inc.

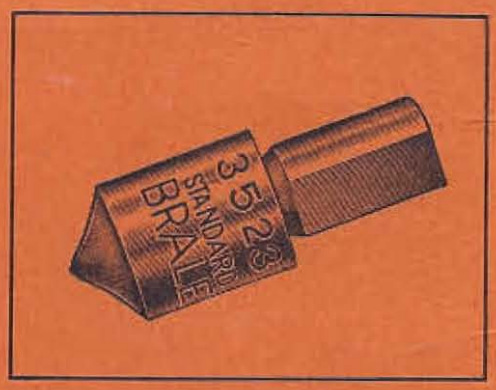

"BRALE" PENETRATOR Sphero-conical diamond penetrator for testing hard steel. Illustration twice actual size. Do not chip diamond by hitting when inserting work. Ultimately breaks after extensive service. Must then be replaced by another of our standardized "BRALE" Penetrators ground to micrometric precision under enormous magnification, else accuracy of machine is lost. (Special "N BRALE" Penetrator required for "Superficial" type of "ROCKWELL" Tester.) Always keep a spare "BRALE" Penetrator for checking old one and for replacement.

BRALE is our Registered Trade Mark for these diamond penetrators.

"ROCKWELL" Test block of hardened and ground steel, or rectangular test block of brass, depending on hardness of material being inspected, must frequently be used as the only practical field method of determining condition of the tester in its entirety. At the very least, the tester should be checked against blocks every day and also whenever penetrator is inserted into position. Spare penetrator and spare dial gauge help to locate trouble if machine is out of condition.

ROCKWELL is our Registered Trade Mark for Test Blocks.

The sphero-conical diamond penetrator used on the Superficial Tester is named the N "BRALE" Penetrator. This is not a part of the regular equipment of the Tester, but is a separate attachment. It is used for testing hard materials such as hardened steel, nitrided steel, tungsten carbide or other similar hard alloys.

Be sure that the diamond penetrator used in your "Superficial" model of the "Rockwell" Hardness Tester is marked "N" before the word "BRALE" on the metal shank because penetrators marked "BRALE" without having the letter "N" are for use in the ordinary "Rockwell" Tester and are not suitable for use in the "Superficial" machine.

After having any of the penetrators out and replacing them, or after putting a new steel ball in the chuck, go through the operations of making a test on a piece of metal to set the chuck properly against the plunger before taking observed readings. Repeat this operation two or three times to seat the chuck firmly.

SELECTING LOAD — Superficial Tester

The weights for the "Rockwell" Superficial Hardness Tester consist of a weight pan which, when hung on the end of the power level, applies a major load of 15 kilograms. In addition to this there are two weights, each of which applies a major load of 15 kilograms. With this combination, major loads of 15, 30 or 45 kilograms can be used.

The load of 30 kg. is recommended for general use. The load of 45 kg. can be used if greater sensitivity is required, provided the metal is of sufficient thickness (or, if case hardened or nitrided steel is being tested, the hardened case is of sufficient thickness).

The load of 15 kg. is not recommended if the heavier load of 30 kg. can be used, but it should be used on sheet metal that is too thin for the 30 kg. or for nitrided steel with a very thin case.

In testing sheet metal, where it is questionable as to which load should be used, examine the underside of the sheet after making a test. If the impression of the penetrator can be seen then the reading is in error and a lighter load should be used.

SCALES — Normal Tester

The symbol for use as a prefix to the value read from the dial depends upon the load, type of penetrator and scale from which dial readings are taken, and these symbols are shown below.

Scale Symbol	Penetrator	Load in Kilograms	Dial Figures
B	**1/16" ball**	**100 kg.**	**Red**
C	**"BRALE"**	**150 kg.**	**Black**
A	"BRALE"	60 kg.	Black
D	"BRALE"	100 kg.	Black
E	1/8" ball	100 kg.	Red
F	1/16" ball	60 kg.	Red
G	1/16" ball	150 kg.	Red
H	1/8" ball	60 kg.	Red
K	1/8" ball	150 kg.	Red
L	1/4" ball	60 kg.	Red
M	1/4" ball	100 kg.	Red
P	1/4" ball	150 kg.	Red
R	1/2" ball	60 kg.	Red
S	1/2" ball	100 kg.	Red
V	1/2" ball	150 kg.	Red

SCALES — Superficial Tester

The symbol for use as a prefix to the value read from the dial depends upon the load, type of penetrator and scale from which dial readings are taken, and these symbols are shown below.

Scale Symbol	Penetrator	Load in Kilograms
15N	**"BRALE"**	**15 kg.**
30N	**"BRALE"**	**30 kg.**
45N	**"BRALE"**	**45 kg.**
15T	**1/16" ball**	**15 kg.**
30T	**1/16" ball**	**30 kg.**
45T	**1/16" ball**	**45 kg.**
15W	1/8" ball	15 kg.
30W	1/8" ball	30 kg.
45W	1/8" ball	45 kg.
15X	1/4" ball	15 kg.
30X	1/4" ball	30 kg.
45X	1/4" ball	45 kg.
15Y	1/2" ball	15 kg.
30Y	1/2" ball	30 kg.
45Y	1/2" ball	45 kg.

LIMITATIONS OF PENETRATORS

The Diamond "BRALE" Penetrators are intended for hard material only, that is material harder than B-100.

(If you have our "Superficial" machine with major loads of 15 kg., 30 kg., and 45 kg., which is a special machine for testing metal too thin to test on the normal machine, then do not use the steel ball for material harder than 15T-93 or 30T-82 or 45T-72 which are all of the same hardness as B-100.)

The range of the 1/16" diameter ball penetrator is from B-100 to B-0. If the ball is used to test material harder than about B-100 there is danger of flattening the ball. Also, because of its shape, the ball is not as sensitive as the cone to differences of hardness on hard samples, where the depth of impression is very slight. If the 1/16" ball is used on material softer than B-0, there is the danger that the cap of the penetrator, which holds the ball in place, will be resting on the sample, or that the power lever will descend too far and be resting on its stop pin. Furthermore, below B-0 the 1/16" ball becomes geometrically supersensitive and the readings erratic because errors and effects of inhomogeneity become unduly magnified.

If the hardness of the sample is below B-0, when using the 1/16" ball and 100-kg. load, then one of the larger ball penetrators or a lighter load should be used. We recommend using the smallest ball that can properly be used to make the test because of the loss of sensitivity as the size of the penetrator is increased. An exception to this is, when testing soft material which is not homogeneous, it may be preferable to use a large ball and thus obtain an average hardness.

For metals softer than C-20 use the 1/16" ball and 100-kg. load.

For metals harder than B-100 use the "BRALE" Penetrator and 150-kg. load.

For metals softer than B-0 use 1/16" ball and 60-kg. load or 1/8" ball and 100-kg. load.

Above it is said that the range of the 1/16" ball penetrator is from B-100 to B-0. It is necessary to emphasize and amplify this because several investigators have pub-

SCALES — Superficial Tester

The symbol for use as a prefix to the value read from the dial depends upon the load, type of penetrator and scale from which dial readings are taken, and these symbols are shown below.

Scale Symbol	Penetrator	Load in Kilograms
15N	**"BRALE"**	**15 kg.**
30N	**"BRALE"**	**30 kg.**
45N	**"BRALE"**	**45 kg.**
15T	**1/16" ball**	**15 kg.**
30T	**1/16" ball**	**30 kg.**
45T	**1/16" ball**	**45 kg.**
15W	1/8" ball	15 kg.
30W	1/8" ball	30 kg.
45W	1/8" ball	45 kg.
15X	1/4" ball	15 kg.
30X	1/4" ball	30 kg.
45X	1/4" ball	45 kg.
15Y	1/2" ball	15 kg.
30Y	1/2" ball	30 kg.
45Y	1/2" ball	45 kg.

LIMITATIONS OF PENETRATORS

The Diamond "BRALE" Penetrators are intended for hard material only, that is material harder than B-100.

(If you have our "Superficial" machine with major loads of 15 kg., 30 kg., and 45 kg., which is a special machine for testing metal too thin to test on the normal machine, then do not use the steel ball for material harder than 15T-93 or 30T-82 or 45T-72 which are all of the same hardness as B-100.)

The range of the 1/16" diameter ball penetrator is from B-100 to B-0. If the ball is used to test material harder than about B-100 there is danger of flattening the ball. Also, because of its shape, the ball is not as sensitive as the cone to differences of hardness on hard samples, where the depth of impression is very slight. If the 1/16" ball is used on material softer than B-0, there is the danger that the cap of the penetrator, which holds the ball in place, will be resting on the sample, or that the power lever will descend too far and be resting on its stop pin. Furthermore, below B-0 the 1/16" ball becomes geometrically supersensitive and the readings erratic because errors and effects of inhomogeneity become unduly magnified.

If the hardness of the sample is below B-0, when using the 1/16" ball and 100-kg. load, then one of the larger ball penetrators or a lighter load should be used. We recommend using the smallest ball that can properly be used to make the test because of the loss of sensitivity as the size of the penetrator is increased. An exception to this is, when testing soft material which is not homogeneous, it may be preferable to use a large ball and thus obtain an average hardness.

For metals softer than C-20 use the 1/16" ball and 100-kg. load.

For metals harder than B-100 use the "BRALE" Penetrator and 150-kg. load.

For metals softer than B-0 use 1/16" ball and 60-kg. load or 1/8" ball and 100-kg. load.

Above it is said that the range of the 1/16" ball penetrator is from B-100 to B-0. It is necessary to emphasize and amplify this because several investigators have pub-

lished results of experimental work in which "ROCKWELL" tests have been made on material harder than B-100, in which they have used steel ball penetrators of 1/16" and 1/8" diameter, obtaining readings up to B-110 or B-120. Such readings are not "ROCKWELL" Hardness because all "ROCKWELL" scales stop at 100.

When the 1/16" ball is used on material above B-100 with the 100-kg. load there is a danger of flattening the ball; when it is used on material around B-115 and 120 this danger becomes a certainty, but this flattening is only the lesser of two of the reasons why the ball penetrator must not be used beyond the limits of its range; the principal reason against this misuse of the "ROCKWELL" is because of the loss of sensitivity which is introduced due to the geometry of the matter. With shallow penetration there are only small differences of depth in relation to large differences in diameter with a spherical penetrator. The "ROCKWELL" test is based entirely on depth measurements and only ignorance of its principle can account for anyone using it where ball impressions are so shallow as to give readings above B-100.

Some investigators have attempted to overcome the flattening of the 1/16" ball when used on hard material by using a 1/8" ball penetrator which of course is less liable to flattening since the applied load is spread over a greater bearing surface, but in using this larger ball on hard material there is even a greater loss of sensitivity on hard material than with the 1/16" ball. No matter what diameter of ball penetrator is used, no "ROCKWELL" readings should ever be taken above B-100 on the dial.

There would be excuse for using the steel ball penetrators on hard materials if there were no alternative, but a good and proper alternative has been provided in the Diamond "BRALE" Penetrator which with the greater load of 150-kg. must be used on material harder than B-100, in order to obtain a hardness reading free from error, of the maximum sensitivity, and a true "ROCKWELL" test that has not been perverted by a freak use of penetrators.

The portion of the B scale from B-0 to B-30 is intended for use only with soft material reading less hard than B-30, and it is not there for use with hard material running to above B-100.

ANVILS

There are four anvils supplied with each tester.

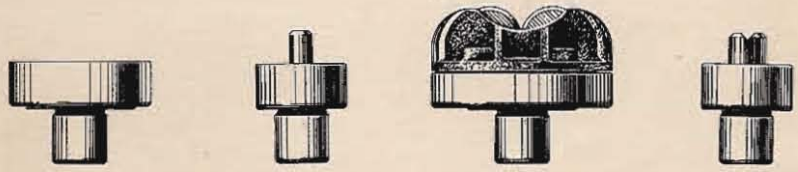

PLANE SPOT CYLINDRON JR. SHALLOW V

Plane This anvil with flat surface should be used in testing flat-bottom pieces of heavy section.

Spot This anvil with small elevated flat should be used for small pieces, thin pieces or any having bottoms not truly flat, since it is very important that contact is made between the piece being tested and that part of the anvil immediately beneath the penetrator. In testing pieces that are not flat, they should be placed on the anvil with the more convex side down, to make better contact with the anvil at the point of test, but never rest cylindrical surfaces on the SPOT anvil.

Cylindron Jr. This is an anvil with hard, parallel, twin cylinders and is used to support cylindrical pieces from 1/4" diameter up to 3" diameter.

Shallow V This is an anvil with a V groove and is used for round pieces that are too small in diameter to be supported properly on the CYLINDRON, Jr. anvil.

A round piece should never be supported on its cylindrical surface by a flat anvil, because of the danger of its slipping out when the major load is applied, and the risk of breaking the penetrator. An exception to this is where other means are provided which prevent lateral shift of the wire.

In addition to the aforementioned anvils, we can supply the CYLINDRON, which is similar to the CYLINDRON Jr., but is larger and is used to support pieces from 2" up to 8" diameter, if the work is several inches in length axially, or up to 5" to 6" diameter, if the axial length is very short.

Diamond spot anvil This is an anvil similar to the SPOT anvil, but having a diamond set into the spot and ground and polished to a flat surface. This is used only with the Superficial Tester and then only in conjunction with the steel ball penetrator for testing soft sheet metal. This anvil, when so used, does not become indented as is the case when using the steel spot anvil.

In addition to the anvils which we can supply, many users make special anvils or supports for unusual shapes and sizes.

If you make any anvils, be sure they are ground flat and true on their undersurfaces, or shoulders, where they rest upon the top of the elevating screw. The stem that enters the hole in the top of the elevating screw must not fit so tightly as to prevent seating all the way around at the shoulder, and that stem must be ground at a true right angle to the flat bearing surface mentioned.

Care should be taken before placing any anvil in the elevating screw to see that the undersurface is clean as well as the top of the elevating screw.

When changing anvils, run the elevating screw to a low position and remove the anvil very carefully so as not to hit the penetrator with the anvil. A few blows from the hardened anvil, or even a single blow, will do more damage to the penetrator than hundreds of tests on hardened steel. It is recommended that, in removing anvils from the elevating screw, one finger be placed across the top of the anvil to form a protection between the anvil and the penetrator.

Caution for testing sheet metal that is thin and soft Tests on such material should be made with the Superficial Tester, using the diamond spot anvil and steel ball penetrator. If, however, it is not possible to use this combination of Superficial Tester and diamond spot anvil, then the test must be made on the steel spot anvil, but repeated tests will indent the anvil in time and this indentation will cause an error in the readings. Therefore, the surface of the spot anvil should be watched and, whenever neeessary, should be relapped. Relapping should be done without rounding the edges of the spot. This top surface must be kept flat. For this purpose, we can supply a special lapping jig for keeping the anvil flat while lapping; this is a round plate with three holes to fit the shank of the anvil. The anvil to be lapped is placed in one hole while the other two are fitted with dummy anvils to form a three-point support.

OIL DASH POT

Warning If the tester is used without oil in the dash pot, the diamond penetrator, if being used, will be broken.

The speed at which the major load is applied is eontrolled by an oil dash pot.

The oil is removed from the dash pot for shipment and, before making a test, it should be filled to within about ¾" from the top of the pot with cold test motor oil such as Mobiloil Arctic Special Grade 10-10 W. This should be an early step in the assembly of the tester.

To fill the dash pot, which is inside the pedestal casting, remove both doors for access and light. The crank handle on the side of the tester should be turned counterclockwise as far as it will go. Unscrew and lift thc cap of the dash pot so that oil can be inserted.

Observe when oil is visible in dash pot and then pump crank handle back and forth, so working oil down past piston, and continue till it is certain the pot is full of oil up to about ¾" from the top.

It is recommended that, under conditions of extreme cold, if the dash pot cannot be adjusted to work quickly enough, shock absorber oil shall be substituted for the regular oil.

A further regulation of the speed of the dash pot, which controls the speed of the application of the weight, can be obtained by using a very light oil to increase, and a heavy oil to decrease, the speed. This change of oil should be necessary only under extreme conditions, where the machinc is used in low or high temperatures.

There is a knurled speed adjustment knob on the side of the dash pot. The speed at which the dash pot operates can be varied by rotating this knob one way or the other.

In adjusting the dash pot which controls the speed at which the load is applied, it should take 5 seconds after the crank handle has been tripped for it to complete its movement with the 100 kg. load in place and no work in the tester, or 4 seconds with the 150 kg. major load.

If the "ROCKWELL" Superficial Tester is being used, the speed should be 7 seconds with the 30 kg. load.

For production testing, where a large number of tests have to be made, the adjustment can be changed to operate at a faster speed especially when testing very hard pieces.

If a little oil should ooze out of the top of dash pot, it will do no harm, and indicates that it was a little too full.

INDEX LEVER ADJUSTMENT—Normal Tester

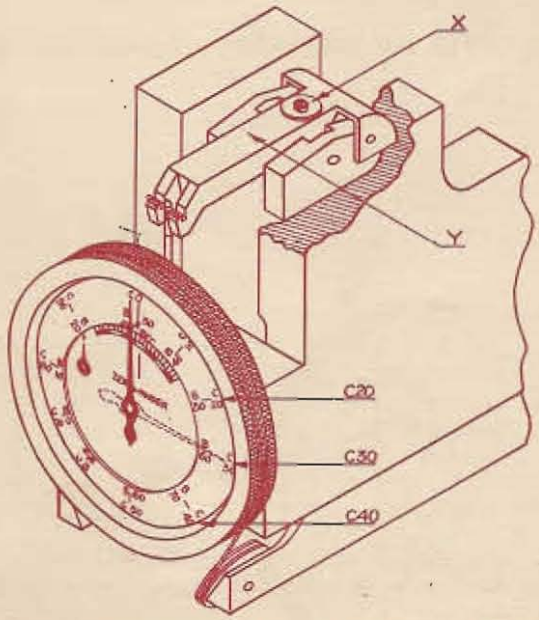

Sometimes, because of derangement through moving or shipping, the screw and knurled nut X in the index lever Y need adjustment. Sometimes the screw is turned when it should not be turned or adjusted.

To discover if adjustment of index lever screw X is needed: Put a piece of steel on the anvil and turn the capstan elevating nut to bring the steel piece up against the

ball penetrator and keep turning to elevate the piece until the hand feels positive resistance to further turning, which will be felt after the 10 kg. minor load has been picked up and when the major load is encountered; the pointer of the gauge should now be between C20 and C40, preferably close to C30. If it is not between C20 and C40, readjustment is necessary. Furthermore, since the pointer travels through several revolutions, it is important to note not only the position of the pointer but also to see that, when the major load is encountered, the pointer is also at the proper revolution which can be determined by the position of the small pointer which should be a little to the left of the dot (or equivalent to 11 o'clock). Then, when the piece of steel is lowered by turning the elevating nut so that the *long* pointer moves through 30 divisions, that is from C30 back to C zero, the small pointer should be vertical (equivalent to 12 o'clock) and in line with the dot; if it is not, it means that the adjustment is one or more revolutions in error and readjustment is necessary.

How to make the index lever adjustment

First, remove cowl, which is held in place by four screws, two in the front and two in the rear.

When the test piece is elevated till it starts to pick up the heavy load, loosen the knurled nut of the screw **X**. Then, using a small screw driver, turn the screw **X** bringing both pointers upright, the small pointer pointing to the dot and the *long* pointer in line with the vertical black line which is in the center of the upper half of the inside dial. Now turn the bezel, bringing the "set" arrow back of the *long* pointer. Then again turn screw **X** so that the *long* pointer moves to the right to C30. The small pointer will now be slightly to the left of the dot. Carefully holding the screw in its proper position with the screw driver, tighten the lock nut.

The object of the adjustment is to see that the elevation of the specimen to pick up the minor load shall not be carried too far, causing even partial application of the major load.

INDEX LEVER ADJUSTMENT — Superficial Tester

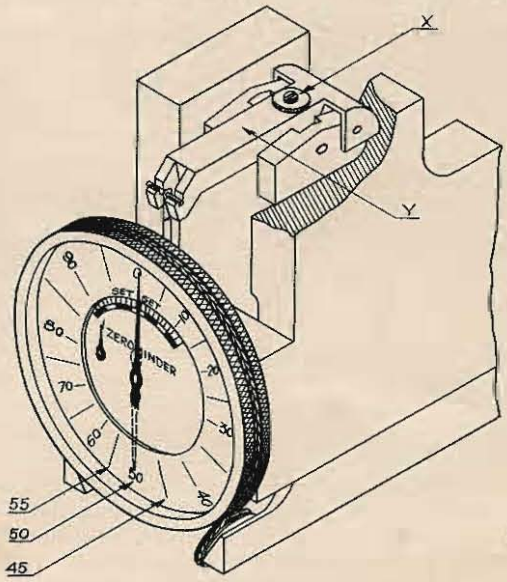

Sometimes, because of derangement through moving or shipping, the screw and knurled nut X in the index lever Y need adjustment. Sometimes the screw is turned when it should not be turned or adjusted.

To discover if adjustment of index lever screw X is needed: Put a piece of steel on the anvil and turn the capstan elevating nut to bring the steel piece up against the ball penetrator and keep turning to elevate the piece until the hand feels positive resistance to further turning which will be felt after the 3 kg. minor load has been picked up and when the major load is encountered; the pointer of the gauge should now be between 45 and 55, preferably close to 50. If it is not between 45 and 55, readjustment is necessary. Furthermore, since the pointer travels through several revolutions, it is important to note not only the position of the pointer but also to see that, when the major load is encountered, the pointer is also at the proper revolution which can be determined by the position of the small pointer which should be a little to the left of the dot (or equivalent to 11 o'clock). Then when the piece of steel is lowered by turning the elevating nut so that the long pointer moves through 50 divisions, that is from 50 back to zero, the small pointer should be vertical (equivalent to 12 o'clock) and in line with the dot; if it is not it means that the adjustment is one or more revolutions in error and readjustment is necessary.

How to make the index lever adjustment

First, remove cowl, which is held in place by four screws, two in the front and two in the rear.

When the test piece is elevated till it starts to pick up the heavy load, loosen the knurled nut of the screw X. Then, using a small screw driver, turn the screw X bringing both pointers upright, the small pointer pointing to the dot and the long pointer in line with the vertical black line which is in the center of the upper half of the inside dial. Now turn the bezel, bringing the "set" arrow back of the long pointer. Then again turn the screw X so that the long pointer moves to the right to 50. The small pointer will now be slightly to the left of the dot. Carefully holding the screw in its proper position with the screw driver, tighten the lock nut.

The object of the adjustment is to see that the elevation of the specimen to pick up the minor load shall not be carried too far, causing even partial application of the major load.

OPERATING INSTRUCTIONS IN DETAIL—Normal Tester

First, select the proper penetrating point (see "Penetrating Point, Selecting—Normal Tester") and insert it in bottom of plunger rod. See that weight for proper load is in position. Now place the proper anvil in the elevating screw (see "Anvils"). See that the undersurface of the piece to be tested, where it will rest upon the anvil, is free from any scale or burr that would flatten under test. Clean or file such away if present.

Place the piece to be tested on the anvil; then, by turning the handwheel, gently raise the piece until it comes in contact with the penetrating point. Continue turning the handwheel slowly until small pointer on the indicating gauge is nearly vertical and slightly to the right of the dot. Now watch only the *long* pointer on the gauge. Continue raising the work until the *long* pointer is approximately upright—within about five divisions plus or minus. You have now applied to the specimen a pressure of 10 kg., which is called the "minor load." Set the dial to zero (i.e., the line marked "set") by turning with the thumb the knurled ring located below the capstan handwheel.

This is always the starting point for all conditions of test, both for the "Brale" and steel ball penetrators, B zero is never used as the starting point of a test.

The setting of the dial to zero may be speeded up by use of the "Zerominder" device, which is fully explained under "Zerominder Device". Apply the major load by tapping downward on the bar which runs horizontally across the front of the machine below the knurled zero adjusting ring. This releases the weight arm and applies the major load uniformly to the penetrating point, forcing it into the material under test to a depth depending upon its hardness. The dial does not indicate

the hardness number while the major load is applied; the major load must be removed before taking the hardness number, and that is done by turning the crank handle, bringing it upward and forward.

The "ROCKWELL" reading is recorded as follows: If the test has been made with the $\frac{1}{16}$" ball penetrator, and the load of 100 kilograms, the reading is taken from the red scale and the letter "B" is prefixed to the number to signify the condition of test.

If the test has been made with the "Brale" penetrator, and the load of 150 kilograms, the reading is taken from the black scale and the letter "C" is prefixed to the number.

If the tests are made with penetrators or loads different from the two standard tests described in the two preceding paragraphs, then the letter denoting the penetrator and load should be given. (See "Scales—Normal Tester.")

Having concluded the test, the handwheel is turned to lower the work, which is removed from the anvil, and the tester is in readiness for the next test.

OPERATING INSTRUCTIONS IN DETAIL—Superficial Tester

First select the proper penetrating point (see "Penetrating Point, Selecting—Superficial Tester) and insert it in bottom of plunger rod. See that weight for proper load is in position. Now place the proper anvil in the elevating screw (see directions on "Anvils"). See that the undersurface of the piece to be tested, where it will rest upon the anvil, is free from any scale or burr that would flatten under test. Clean or file such away if present.

Place the piece to be tested on the anvil; then, by turning the handwheel, gently raise the piece until it comes in contact with the penetrating point. Continue turning the handwheel slowly until small pointer on the indicating gauge is nearly vertical and slightly to the right of the dot. Now watch only the long pointer on the gauge. Continue raising the work until the long pointer is approximately upright—within about five divisions plus or minus. You have now applied to the specimen a pressure of 3 kg., which is called the "minor load." Set the dial to zero (i.e., the line marked "set") by turning with the thumb the knurled ring located below the capstan handwheel.

The setting of the dial to zero may be speeded up by use of the "Zerominder" device, which is fully explained under "Zerominder Device". Apply the major load by tapping downward on the bar which runs horizontally across the front of the machine below the knurled zero adjusting ring. This releases the weight arm and applies the major load uniformly to the penetrating point, forcing it into the material under test to a depth depending upon its hardness. The dial does not indicate the hardness number while the major load is applied; the major load must be removed before taking the hardness number, and that is done by turning the crank handle, bringing it upward and forward.

At this stage the reading of the "ROCKWELL" Superficial Hardness number is taken. If the test has been made with the $\frac{1}{16}$" ball penetrator, then the reading is prefixed with the major load and the letter "T." (Example, 30T85.)

If the test has been made with the "N-BRALE" penetrator, then the reading is prefixed by the major load and the letter "N" (see plate affixed to front pillar of the Tester). (Example, 30N78.)

In addition to the "N" and "T" scale tests, other tests may be made with special scales designated as "W," "X" and "Y." As with the "N" and "T" scales, the "ROCKWELL" Superficial hardness number should be prefixed with the major load used while the letter indicates the penetrator used. (See "Scales—Superficial Tester.)

Having concluded the test, the handwheel is turned to lower the work, which is removed from the anvil, and the tester is in readiness for the next test.

Oiling Every two months remove the cowl from the testing head, remove the weights and weight pan, lift the power lever to disclose under its free end a hole in the top of the long vertical pusher rod that controls the lifting and lowering of the weights. Put a little oil in that hole.

Once a week clean and oil the work elevating screw and the surface under the capstan nut.

Checking tester When making any important hardness tests be sure to check your tester on the master test blocks against which you know, by experience, your machine has checked in the past. By checking the tester, both before and after your important tests, you guard against errors due to damaged penetrators, use of wrong weight, bad adjustment of the tester due to some inexperienced person operating it, etc.

Level the "ROCKWELL" tester by the top surface of plane anvil. It needs to be only approximately level, but see that its seating is firm. It may be bolted to bench by bolts used in shipping it.

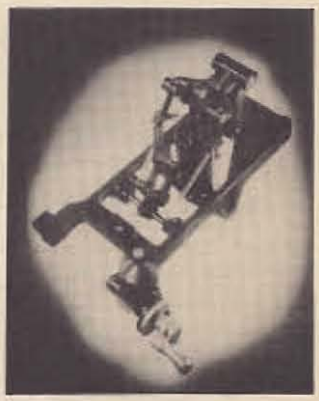

Operating and Control Mechanism The operating and control mechanism inside the pedestal and shown at the right may be removed in its entirety for repair or, if desired, a new mechanism may be quickly substituted for it as they are interchangeable.

OPERATING INSTRUCTIONS IN BRIEF

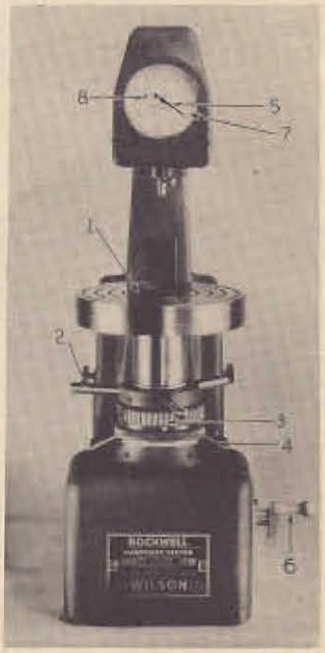

Usual and most precise method of operation Before starting test see that this crank handle is turned forward (counter clockwise) as far as it will go, thereby lifting weights.

1—Place specimen securely upon anvil or table.
2—Elevate specimen into contact with penetrator and further until small pointer (8) of the indicating gauge is nearly vertical and slightly to the right of the dot; then still further until large pointer points vertically upward.
3—Turn zero adjuster of gauge till the "Set" arrow on dial is exactly back of pointer.
4—Push down on depressor bar to apply major load.
5—Watch pointer till it comes to rest.
6—Pull crank handle forward, lifting major load, but leaving minor load still applied.
7—Read "ROCKWELL" Hardness Number.

Speedy method of operation, using the "Zerominder" supplementary scale for quantity inspection testing, is described under "Zerominder Device for Speedy Testing."

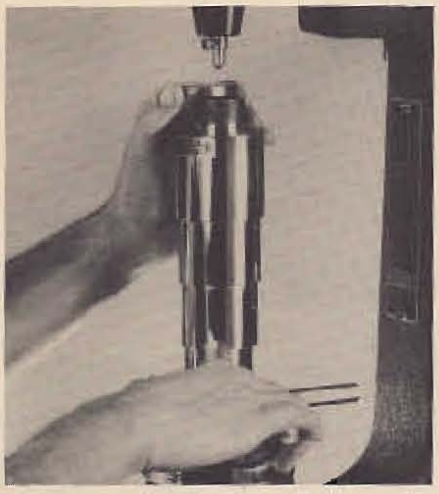

Place specimen on anvil or testing table so it is clear of the penetrator point, being careful not to hit penetrator. Good practice requires that piece to be tested shall not have dirt, heavy oil or scale underneath, where it rests upon the anvil. The anvil must be selected to suit size and shape of specimen.

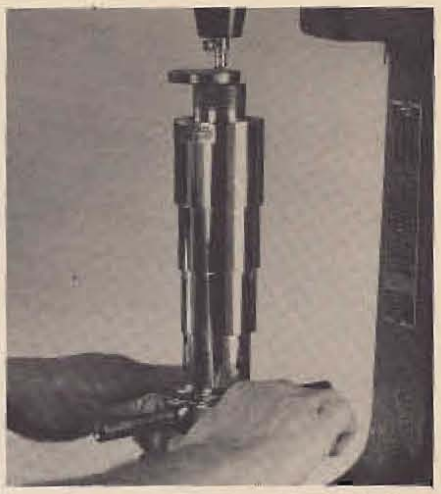

Turn Capstan Nut to elevate specimen into contact with penetrator and continue turning and forcing penetrator upward till small hand on dial points approximately to dot and continue a bit further till large hand is approximately vertical. This will have applied the minor load.

Hand control of elevation of specimen by capstan wheel nut which causes specimen to press against and lift penetrator, thereby causing application of minor load. Thumb of same hand turns knurled ring to zeroize gauge. Same thumb depresses bar to release application of major load. The machine automatically controls speed of load application, after which the major load is removed by turning the crank handle at the side of tester, bringing it upward and forward, leaving hardness number indicated on scale of gauge.

For tests of the most extreme accuracy the zeroizing of dial would be done leisurely before depressing the bar that operates major load system. On quantity inspection testing, to save time, the zeroizing of dial is done last, by means of the "Zerominder" device on the gauge, in a manner set forth under "Zerominder Device."

Right and Wrong Methods

Protect the "BRALE," or ball penetrator, with your finger when you remove an anvil, for hitting the hard but brittle diamond "BRALE" with hard anvil will break the "BRALE"—while hitting a steel ball penetrator will deform it.

Wrong method as "BRALE" or ball penetrator is hit in removing anvil or specimen due to not lowering the elevating screw enough. It is equally bad to hit the penetrator or drag work against it when inserting specimen.

Correct method of anvil support for cylindrical work which must rest in type of anvil that locates specimen centrally under penetrator and prevents movement of specimen under testing loads.

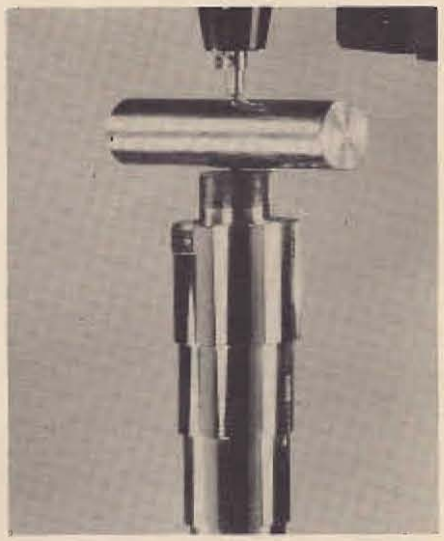

Wrong method of supporting cylindrical work on spot anvil, as no centering of round piece is secured and rolling of specimen may cause breakage of penetrator or erroneous readings.

Correct method of testing long, heavy work requires our Jack Rest or some improvised means to support the extended end of the piece to avoid any non-vertical pressure of specimen against penetrator. The Jack Rest should be adjusted so that a long piece being tested rests upon the "*Cylindron*" Anvil in the tester so that it is *parallel with the rollers* and touching them throughout their length. This Jack Rest may be purchased as an accessory.

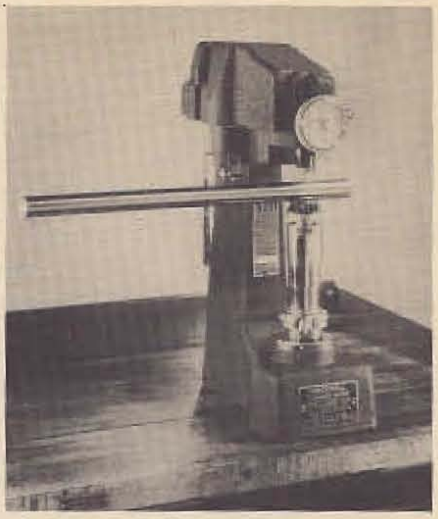

Wrong method of testing long work, causing injury to penetrator and, through leverage action, causing drag and jamming of plunger rod and inaccurate readings. Only short or light weight material may be permitted much overhang, for the specimen must be pressed rigid on the anvil by the pressure of the minor load which is applied as shown in a previous illustration. Jack Rest or Vari-Rest would correct this fault.

Medium overhang can best be taken care of with the adjustable Vari-Rest support, which rises and falls with the elevating screw. It is sold as an accessory. If you build any small rests, attach them carefully and firmly to the elevating screw—never to the anvil.

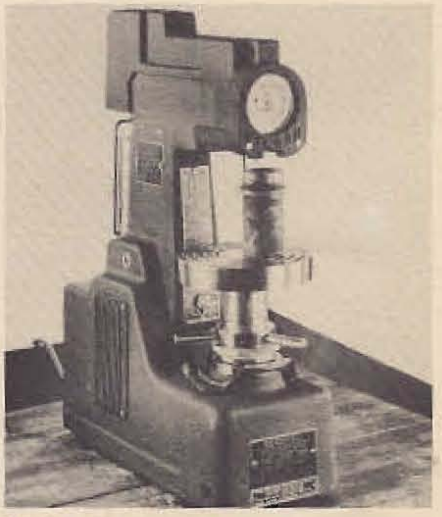

Massive pieces or pieces of such peculiar shape that they should rest in cradles or on blocks are best supported on this 8″ diameter Testing Table, a favorite accessory for the toolroom. Wedges would permit the table to support some large, round parts.

DIAL GAUGE

The dial gauge used on the "ROCKWELL" Direct Reading Hardness Tester is a micrometer gauge which measures, with scale reversed, the depth of indentation which is made in the sample under test when the load is applied to the penetrating point.

The dial gauge should not be oiled. If any trouble is suspected in the gauge, it should be removed from the tester (see below) and the stem raised with the finger. If it does not fall back freely—that is, if there is any sign of stem sticking—the gauge should be returned for repairs. Ship it to us at 383 Concord Ave., New York 54, N. Y.

It should be emphasized that, in handling the dial gauge, the greatest care must be exercised, as the stem is easily bent, which will cause it to bind, and if in applying the gauge to the tester it is necessary to tilt it to prevent the cross pin binding in the slot of the index lever, the gauge should be grasped by its body and not by its stem.

If the gauge must be removed, take off the head cowl by removing four screws, two at the back of the top of the cowl and two at the lower part of the front; loosen the clamp screw at the top of the gauge bezel and slip the cable over the top of the gauge. Then remove the gauge.

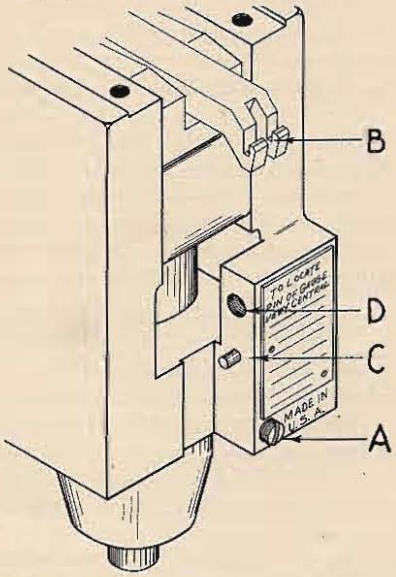

If the same gauge is being replaced on the tester, insert the cross-pin in the slot of the index lever, then the lug at the back of dial gauge is brought into position, easing it over the dowel pin C which projects from the head of the tester so that this dowel pin slips into the smaller of the two holes in the gauge lug. This allows the lug to come flush against the machined surface of the tester. Now into hole D insert the screw with its washer and tighten it, at the same time holding the dial gauge so that the lower part of the back of the gauge case is in contact with the head of positioning stop screw A.

If a new dial gauge is used, then it will probably be necessary to readjust this stop screw A. To do this, the gauge must be taken off the tester and the screw turned in or out until, when the gauge is replaced with the case touching the head of the screw and the small pointer is brought up to the dot on the dial, the cross pin is exactly central in the slot when sighted from the side.

A change of dial gauge will also necessitate a readjustment of the "Index Lever Adjustment". (See "Index Lever Adjustment".)

Replace the cable in the manner in which it was removed and tighten the clamp

screw at the top of the gauge bezel. Remove the doors on the side of the tester, and see that the cable has not come off the pulleys located at the lower part of the main frame casting. If it should be necessary to adjust the tension on the cable, remove capstan nut and small cowl together with depressor bar system back of handwheel. Under this cowl is an adjustment serew for regulating the cable tension.

It is necessary to adjust the ealibrated movable scale of the dial gauge so that the "Set" arrow moves the same amount to the right and left of the eenter of the stationary "Zerominder" markings. To do this, turn with your thumb the knurled zero adjusting ring, under the capstan nut, as far as possible to the right; loosen the clamp screw in the top of the bezel and turn the bezel until the "Set" arrow is over the last space on the left side of the "Zerominder" markings. Re-tighten elamp screw.

The stationary "Zerominder" markings on gauge are for use in speed testing by "Zerominder" method described under "Zerominder Device".

The dial of the gauge is provided with two graduations, one printed in black figures and the other in red. The black figured scale is used whenever the Diamond "BRALE" Penetrator is used in making the test, while the red figured scale is used whenever the test is made with a steel ball penetrator, no matter what its size.

The reason that the "Set" point of the red figured scale is at 30 instead of at 0 is to avoid readings below zero on soft brass, which would require a negative symbol and cause confusion. One revolution of pointer = .008" indentation.

One revolution of the large pointer represents movement of the penetrator of 0.1 mm. (.004").

The hardness scale designations of the "ROCKWELL" Superficial Hardness Tester will be found on the plate affixed to the front pillar.

The dial gauge has been tested for accuracy through one revolution and tests should not be made in which the depth of penetration exceeds one revolution of the pointer; if it does, the load should be changed to a lighter one or changed from the "N" "BRALE" to the ball penetrator to bring the penetration within one revolution.

"ROCKWELL" TEST BLOCKS

If we could make a "ROCKWELL" Hardness Tester in form as simple as a "ROCKWELL" Test Block that is the way we would make it. We cannot do that and so we build you a machine which has, and must have, many parts. Its parts can get worn, broken, dirty or be put out of adjustment, just as any sort of maehine can; and a *measuring* machine, especially one measuring micrometric values, is in one important way very different from a machine to do *work*. A measuring machine loses not some but all merit when not in fine condition.

Many "ROCKWELL" Testers have been in service many years, yet receive little or no checking. These old machines, their penetrators and gauges, used by successive operators on thousands or millions of tests, cannot all be in good condition. Even new machines should be checked frequently to make certain that they are in good order.

While it is impossible to give you a simple thing with which to measure hardness of your product we can give you the simplicity of a carefully made test block to check your "ROCKWELL" Tester. Don't be careless, or a gambler in your hardness testing, when there are ways provided for precision testing. Test blocks are cheap,—and cheaper still when ordered three or more at a time. The operation of the "ROCKWELL" is so simple that it is often entrusted to those who have had so little experience in measurement that they do not realize the need for checking. Someone should assume or be assigned that responsibility in each plant. We make the "ROCKWELL" with care and precision. We see that it reaches you in good order. After that the responsibility to ascertain that the machine is in shape for precision testing rests with you, and the test block puts the accuracy of our standardizing laboratory at your service.

Remember that if the gauge or penetrator or some other part of your machine is in bad order you are *not* making a genuine "ROCKWELL" Test.

DIAL ZEROIZING CABLE

If it is necessary to insert new cable, remove the head cowl by removing four screws, two at the back of the top of the cowl and two at the lower part of the front. Remove the capstan nut and the cowl covering the cables located at the base of the machine behind the bezel control unit and release the cable tension by turning the screw located between the cables.

Loosen the small clamp screw on the top of the gauge bezel, slip the cable over the bezel and out of the grooves in the two pulleys located beneath the gauge. Remove the bracket holding these two pulleys. Then remove the buttons located in the sides near the top of the main casting which are there simply to fill two peepholes. Turn the machine on its back and remove the weight control mechanism to which the Oil Dash Pot is attached; this is accomplished by removing the crank handle, then the two doors, one on either side of the main casting; then three Allen cap screws, one at the front and two in the rear of the mechanism. Release the small screw holding the clamp which holds the cable to the zero adjuster. Remove the three small screws which fasten the finger grips to the zero adjuster. The old cable can now be pulled out of the casting.

Slip the new cable at middle of its length under the washer on top of the dial bezel, then tighten the clamp screw, thus holding the cable in the groove of the bezel. Keeping the wire straight feed the ends through the two holes in the front of the machine. Look through the peepholes and make sure the wire is running through the grooves in the pulleys. Reach through the bottom of the machine and pull the wire through the next set of pulleys, being careful not to kink the wire. Put the ends of the wire through the two holes in the front of the machine and bring the wires around the groove in the zero adjuster. Clamp the cable lightly. Replace the bracket with the two pulleys and slip the cable in the pulley grooves. Holding the free ends of the cable, pull the cable tight and clamp securely. Cut off the excess wire.

Replace the weight control mechanism and the crank handle; bring the tester back to the upright position. Replace the finger grips on the zero adjuster.

Arrange the limited rotation of the knurled zero-adjusting ring, under the capstan nut, with proper relation to "Set" arrow on the dial gauge as explained under "Dial Gauge". Adjust the tension plate by tightening the screw located on the bottom of the main frame casting. Replace head cowl, cowl covering cables, and handwheel.

CORRECTING TROUBLE

Test Blocks which have been marked from readings made on our Standard Testers may be purchased from us, and the Tester should be periodically tested by means of these blocks; particularly if it is suspected that the Tester is not reading correctly, recourse should be made at once to the calibrated blocks. (Do not use a test block which has had the old impressions ground off. Such a block will probably be uneven in hardness; also there is no certainty that the new surface will be the same hardness as the original surface.) These tests will indicate whether the trouble is with the penetrator or the Tester; if, for instance, correct readings are shown on a soft block with ball but incorrect on a hard block with diamond, it would indicate that the trouble is with the diamond penetrator, but if incorrect readings are shown on both hard and soft blocks, that would indicate trouble in the tester and not with the penetrators.

If the various suggestions which follow fail to locate the cause, and to cure the trouble, then a letter should be written to us, giving in detail as fully as possible, an account of the trouble that exists, quoting figures when possible. This will enable us to suggest possible remedies and perhaps prevent the necessity of returning the Tester to the factory.

Speed of test — too slow or too fast

The correct speed recommended at which to apply the major load is from four to five seconds; for production testing, where speed is important, this time may be slightly less, but it must be recognized that when the speed reaches two seconds or faster there is a sudden drop on the penetrating point instead of a gradual application of the load; this causes a deeper penetration, and if the diamond penetrator is being used, great danger of breaking it.

The speed is controlled by the oil dash pot, and this speed can be regulated according to directions.

If, in filling the dash pot, too much oil has been used, it will force itself out as tests are made; while, if there is a sudden drop at the start of the stroke, it is because there is not enough oil in the dash pot. The proper amount is within about ¾" from the top of the pot.

If, when applying the minor load, the small pointer of the indicating gauge cannot be brought to a vertically upright position

First look to the handle at the right of the machine and see that it is in its forward position; remove head cowl. Look to the top of the dial gauge stem and see that the small cross-pin does not bind in the slot of the index lever, which operates the Dial Gauge. If there is a binding, which is determined by lifting the index lever and allowing it to drop back into position, the screw which holds the gauge in place should be loosened and the gauge re-adjusted according to 6th paragraph, under "Dial Gauge". Then tighten the screw, making allowance for the fact that this tightening will tilt the gauge forward. If, after checking over the aforementioned points, the small pointer of the gauge still cannot be brought vertically upright, then it will be necessary to turn the adjusting screw in the index lever, as explained under "Index Lever Adjustment".

If low readings are obtained

This may be due to a broken diamond penetrator. The "Brale" penetrator should be removed from the tester and the point examined with a magnifying glass. If it is broken, it should be returned for replacement. If there is any doubt as to whether or not it is broken, return it to us for our examination.

If the tester, while the load is on, is subjected to vibration, too deep penetration and low reading will result.

Low readings may be caused by anything which would throw the penetrator or anvil out of perpendicular in its relation to the tester; that is, any dirt or metal chips or any foreign matter which comes between the seating of the anvil and the top of the elevating screw or between the shoulder of the penetrator and the lower face of the plunger.

Dirt or loose scale between the piece tested and the anvil would probably compress under application of the major load and give a low reading.

See that the fit of the anvil into the elevating screw is not too close a fit. It should be sufficiently loose so that when the anvil is lifted it will fall back into place without being forced.

The fit of the penetrator in the hole of the plunger should be such that it can be inserted and removed without undue force.

Friction in the head of the tester usually causes high readings through the prevention of the full application of the load, but it may sometimes cause low readings when it acts in such a way that it prevents the pointer of the gauge coming back to its proper position after the major load has been applied and released. To cure this it is necessary to clean the head parts, as described under "Cleaning Head Parts".

If high readings are obtained

First look to the penetrating point; if the $\frac{1}{16}$" ball is being used it may have beeome flattened; remove the chuck from the testcr, unscrew the cap, place a new ball on the stem and

replace the cap (extra balls are supplied with the machine, and a further supply can be purchased in lots of 100). If the "BRALE" penetrator is being used, remove it from the machine and examine the point with a magnifying glass—if it is broken it should be returned for replacement. If the trouble is not with the penetrating points, then the high readings may be caused by a fault in the adjustment of the index lever screw (see "Index Lever Adjustment"), for if in applying the minor load, the major load is encountered or nearly encountered, a high reading results. High readings may also be caused by the introduction of friction in some of the working parts, either dirt or rust, and the head of the tester should be cleaned as described under "Cleaning Head Parts".

If the readings are non-uniform This is probably due to non-uniformity in the piece being tested and before deciding that the machine itself is at fault, tests should be made upon the standard test blocks supplied with the machine. It is important that the underside of the test piece, when it comes in contact with the anvil, be free from dirt, grit, loose scale or any projections which would flatten out as the major load is applied. If any such burrs or small projections do exist and if, for any reason, it is not practicable or desirable to remove them by smoothing the under surface, then a preliminary test should be made with a small block placed between the penetrating point and the work and the regular load applied. Then the block may be removed and the test made in the usual way. Care should be taken before placing any anvil in the elevating screw to see that the undersurface is clean as well as the top surface of the elevating screw.

If the dial gauge is at fault That is, if, when the stem is raised with the finger, it does not return freely, but binds or sticks it should be removed from the machine and returned to us at 383 Concord Ave., New York 54, N. Y., for repairs. Sometimes the wrong load is employed so make sure the correct penetrator and load are in place. Also remember that no matter what penetrator and load are used, after the minor load is applied, you must zeroize the long pointer.

ELEVATING SCREW UNIT

The work elevating screw has telescopic sleeve covering which may be lifted for oiling the part of the screw above the capstan nut. About once a week the portion of this screw at and somewhat below the capstan nut should also be cleaned and oiled.

The sub-sleeve, which covers the part of the elevating screw that is below the machine, has the simple, single purpose of dust protection.

Keep the elevating screw lubricated with "Eel-Skid" oil. Also oil the bearing of the capstan nut handwheel hub where it rests and works upon the hardened steel sleeve. It is well to lift the screw and wheel to reach this surface for oiling, but be sure to first remove anvil from the elevating screw, the penetrator from the plunger rod and the penetrator clamp screw. Otherwise, in lifting the screw, the anvil is certain to hit the penetrator and, if the diamond is being used, it will be broken and the anvil indented and spoiled.

See that the top surface of the elevating screw as well as the undersurface of the anvil is kept clean. Do not allow dirt or chips to become embedded in this top surface, for this will prevent a proper seating of the anvil and cause erroneous readings.

Sometimes, the elevating screw receives an accidental blow, forming a burr on one of the threads. Then, when the screw is lowered so that this burr engages in the handwheel or enters the hardened sleeve, the screw binds. To correct this, the burr should be carefully removed with a fine file, but be sure to use the file *only on the spot* where it is needed. Do not place the screw in a lathe and file, grind or emery paper the whole circumference, for that will reduce the diameter of the screw at that point and cause excessive play between the screw and sleeve, which is detrimental to good results.

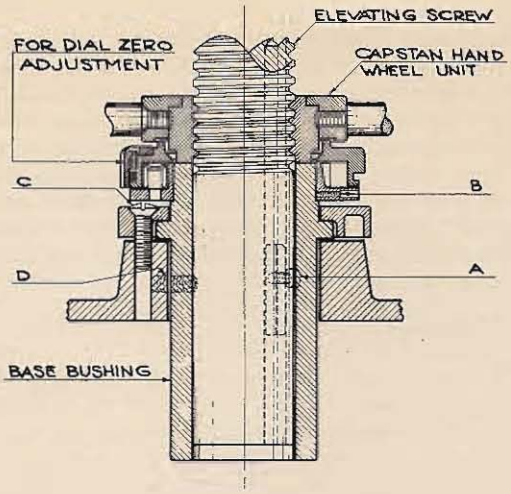

If it is necessary to remove the elevating screw, this is done by taking off the capstan handwheel and removing the clamp screw for the key, allowing the elevating screw to drop out of the bottom of the machine. The clamp screw for the key A is reached through a hole in the casting on the right-hand side of the tester just below the clamp ring. It is necessary to raise the depressor bar in order to get a screw driver into this hole. The elevating screw is replaced in the same manner as it was removed.

If for some reason it is necessary to remove both the elevating screw and the base bushing from the tester, proceed as follows: Take off the handwheel, remove the small cowl back of the elevating unit and also the zero-adjusting unit. To remove this zero-adjusting unit, lower the elevating screw as far as possible; release the hollow set screw B, located in line with the keyway which clamps this unit to the base bushing, and slide the unit off the base bushing, keeping the gauge cable under tension so it will not slide off the pulleys in the machine. Remove the 3 screws C which clamp the base bushing. Release the two front centering screws D and slide the complete unit up and out of the machine.

In order to replace the elevating screw and base bushing unit, reverse the above procedure.

The hardened sleeve in which the elevating screw works is individually fitted. It must be large enough in diameter to permit the elevating screw to work freely and yet not so large that there is excessive movement or play between these two parts. A difference of .0005" makes all the difference between binding and a fit that is too loose. For this reason it is important not to burr the screw by striking it. It should be kept clean from chips and dirt.

If the elevating screw key is taken out of the slot, be sure to mark it so it will be replaced in the same position. It should not be up-ended.

Keep the elevating screw clean.

If the elevating screw binds slightly, it may be improved (after first removing the anvil, penetrator and also the thumb clamp screw) by taking hold of the handwheel and, with pump-like action, lifting and pushing the screw up and down in its sleeve with the aid of plenty of oil.

If tests are to be made on round work such as tubing or wire, particularly if it is of small diameter, it is important that the elevating screw and the V-anvil which is being used to support the work are properly aligned with the penetrating point, so that the penetrator will make contact with the work exactly at the center. This alignment has been properly set before the tester leaves our factory but there is a possibility that it may be deranged in transportation, in which case it can easily

be corrected and should be if small diameter rounds are to be tested; if flat surfaces are to be tested then an accurately centered elevating screw is not essential.

In order to test the alignment of penetrator with elevating screw, put the diamond "BRALE" in its place in the tester, also the small V-anvil; now take a piece of straight round rod about ⅛" diameter and 2 or 3 inches long, rest this on the anvil and raise it. By turning the handwheel as though making a test, come up very gently until the rod just touches the diamond penetrator (the indicating gauge pointer should move about 5 divisions). Now reverse the direction of turning to lower the rod. Next turn the anvil through one-half a revolution, taking care not to disturb the rod in its relation to the anvil. Now again turn the handwheel until the rod just touches the diamond. Lower the rod and examine the marks made on it by the diamond through a magnifying glass. If there is only one impression, the elevating screw is properly centered; if there are two impressions, then adjustment is necessary in order to test accurately rounds of small diameter.

The elevating screw is adjusted by means of four screws D set in the base; it is locked in place by three screws C.

If it has been found necessary to readjust the elevating screw a *small* amount, this may be done by means of the screws D, testing the center by means of the round wire on the V-anvil as previously described. If, however, the center is far off, it will be necessary to release clamp screws C. In order to reach screws C, remove the zero-adjusting unit.

This can be done by removing the handwheel and releasing the hollow set screw located in line with the keyway in the zero-adjusting unit which clamps this unit to the base bushing. Lower the elevating screw as far as the key will permit and slide the zero-adjusting unit off the base bushing, keeping the gauge cable under tension so it will not slide off the pulleys in the machine. Loosen the three screws C (these should not be left too loose but should first be loosened then reverse the direction of screw driver until the screws are tightened with a light pressure of the fingers). Now make the adjustment by means of the screws D, testing the center by means of the round wire on the V-anvil as previously described. Finally tighten the three screws C. This should be done carefully by tightening each screw a little at a time; otherwise the adjustment may be upset. The alignment should now be retested and, if it is found that tightening the clamp screws C has upset it, the adjustment must be repeated.

If the zero-adjusting unit does not operate freely, remove the capstan handwheel and lower the elevating screw as far as possible. Remove the cowl in back of the zero-adjusting unit. Loosen the small, hollow set screw B which clamps the zero-adjusting unit to the base bushing and which is located in line with the keyway. Slide the complete unit up and off the base bushing and unwind the gauge cable from around the zero-adjusting unit. In doing this, note carefully its position for reassembly and make certain not to pull the cable through the two small holes.

Wash the zero-adjusting unit in kerosene in order to remove all dirt and hardened oil. Replace the unit in the same manner as it was removed and lubrieate with good clean oil.

Angular Adjustment of Capstan Spokes

In production testing of a large number of pieces of the same size and shape, it may so happen that the spokes of the capstan handwheel are not in a convenient position so that the knurled ring can be easily moved with the operator's thumb. Under this condition, it is possible to change the relation of the spokes on the handwheel to the knurled ring by loosening the 3 set screws on the capstan handwheel and turning the spokes to a convenient position for rapid application of minor load and adjustment of the zero-setting device. This adjustment of the capstan handwheel spokes can be best made after the minor load is applied. It should be pointed out that this adjustment is simply for the sake of convenience and in no way is necessary for the correct application of either the minor or major load.

CLEANING HEAD PARTS

Disassembling head

Caution You will ruin your "ROCKWELL" Tester if you use coarse emery when cleaning head parts of the tester. Use only the finest of blue back emery paper.

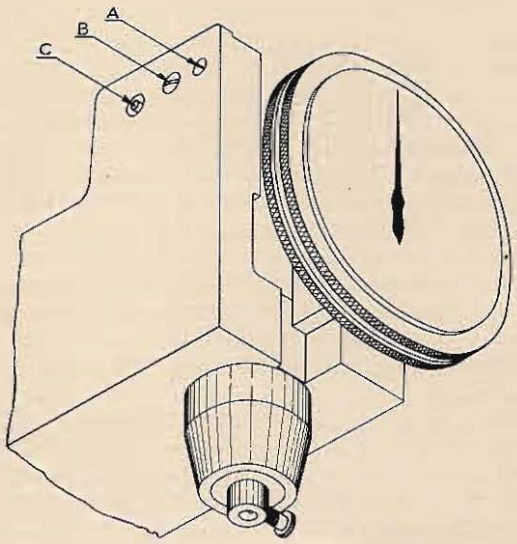

1. Remove head cowl, all weights, weight pan and penetrator clamp screw.
2. Remove in sequence screw A, screws and nuts B (from both sides of tester), and index lever pin C, together with index lever and index block.
3. Loosen fulcrum knife edge set screw D.
4. With the knife edge removed, the power lever can be raised and the plunger assembly lifted out.

   Carefully note position of minor load spring because in re-assembling, this spring must be put back as it was, without upending or turning.

   The plunger sleeve in which the plunger assembly works remains in the head and must not be moved.

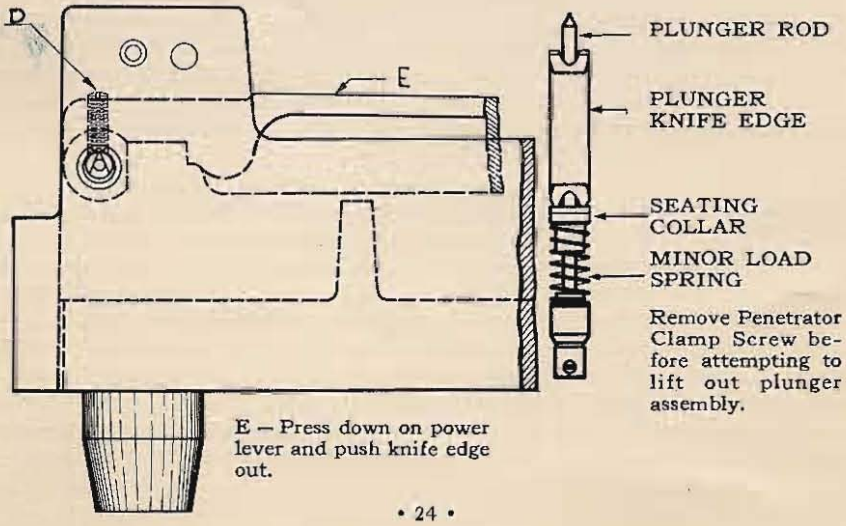

Cleaning All the parts should be wiped with a clean rag, free from fluff or grit; if any oil has gummed or dried, it should be removed by washing the part in gasoline or benzine. If there is rust on the plunger, it should be removed by revolving the part in a lathe and using gasoline applied with a piece of wood. Emery paper is not recommended because of the danger of spoiling the flatness or angle of the cone at lower end of plunger thus preventing a proper seating of the plunger in the sleeve.

Examine the lower face of the plunger and see that no chips are embedded in the steel and that there are no marks or projections which might prevent the proper seating of the penetrator. If this contact face is very dirty or rusty, it should be carefully drawn across a piece of fine blue back emery paper several times upon a flat surface, but *do not use coarse emery or a file.* At this point it would be well to also examine the shoulders of the penetrators, where they make contact with the lower face of the plunger and see that they also are free from embedded chips or anything which would prevent a proper seating.

Having cleaned the removable head parts, the plunger sleeve, which *must* remain in the machine, should be cleaned; this is done by winding a clean rag around the end of a piece of wood and ramming this down into the sleeve. See that no dirt remains on the ledge formed by the cone at the lower end of the sleeve.

The parts are now ready to be re-assembled; first wipe clean the lower end or cone face of the plunger rod and apply a light smear of watch oil on the upper end where it passes through the hole in the index block. *Use only the best quality watch or clock oil.* Under no conditions should common lubricating oil be used.

After oiling the plunger, replace on it the minor load spring without up-ending or turning it from its original position, then the seating collar and the plunger knife edge. This plunger assembly is now held by the top of the plunger and lowered into the plunger sleeve. Bring the power lever into position and move it backward and forward very gently to work the plunger knife edge into its proper groove seatings, top and bottom.

The remainder of the assembly is merely a reversal of the taking down operations; the power lever is pressed down while the fulcrum knife edge is inserted with the letter "L" at the left and the word "front," as indicated. Before inserting fulcrum knife edge, be sure that the power lever is raised by seeing that the crank handle is in its forward position.

Put the index block and lever in place and push the index block pin through till it finds all the holes, then gently tap it all the way through. Next, replace the thin guide screw and the two index block screws and nuts, and cowl. Check the index lever adjustment described under "Index Lever Adjustment."

CARE OF 1/16" BALL PENETRATOR

Whereas a $\frac{1}{16}$" hardened steel ball will hardly lose its shape when used on material softer than B 100 (or the equivalent to that hardness if the Superficial scale is being used) except by wear, there is in addition to the matter of wear some chance that pieces of very hard steel may be tested by the ball before it is recognized that the steel is very hard. Such testing would cause the ball to be permanently deformed. All this necessitates the renewal of the ball from time to time, and the ball chuck is made to facilitate this changing of balls.

In the following sketches note that the thrust on the ball is sustained by the Socket R in the Stem S. The Cap C serves to hold the ball in position when no load is on and yet this Cap C must leave at least ⅓ of this $\frac{1}{16}$" ball exposed for penetrating purposes. This means that the hole in the end of the Cap C which retains the ball, yet exposes enough of it for testing purposes, is only 0.002" smaller than the ball itself.

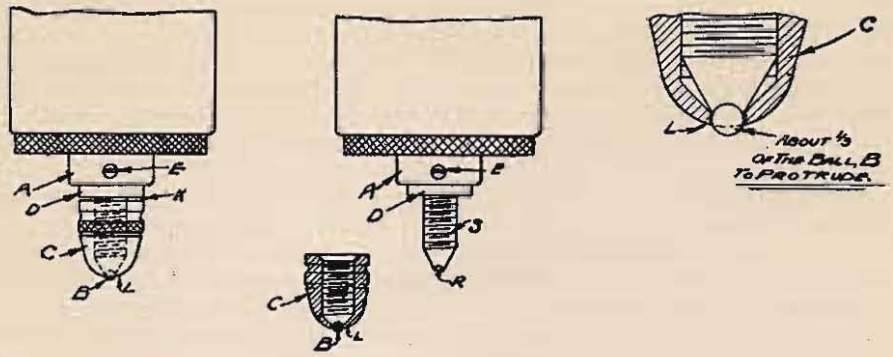

Caution in tightening cap

This in turn means that if the Cap C is screwed home against the ball with merely the gentle finger pressure one uses on a rubber fountain pen cap, that is, with a sensitive, yielding pressure, the ball will be properly held. But if the Cap C is forced hard the ball will be driven right through the lip L and the Cap ruined. When a ball of full size has been forced through the Cap, the Cap is of no further service, for attempts to peen it and make it hold the ball, throw the hole off center and the ball no longer rests properly in the Socket R, and hardness tests with a penetrator that is not both firm and central are utterly worthless.

Note that the Space K is intended to exist. Do not force the turning of the Cap C and try to close up K.

In passing on these instructions make them very clear and do not by any chance make the operator think that there should be any space between A and D, for that should not exist, and the chuck should be pushed up into clamped position A. Whenever readings with the ball penetrator are in doubt, try a new ball.

OUR $\frac{1}{16}$" STEEL BALLS ARE OF EXCEPTIONAL QUALITY AND ACCURACY OF DIMENSION. THEY ARE QUITE INEXPENSIVE, AND AN AMPLE SUPPLY SHOULD BE KEPT ON HAND AT THE TESTER SO THAT THE OPERATOR WILL NOT BE TEMPTED TO USE FLATTENED BALLS AND OBTAIN INACCURATE READINGS.

From time to time see that the shoulder of the chuck which contacts the bottom of the plunger rod of the tester is *absolutely* free from dirt or chips.

BRALE

Trade-mark Reg. U. S. Pat. Off.

DIAMOND SPHERO-CONICAL PENETRATOR

These "BRALE" Penetrators are all made from fine and carefully selected diamonds. The grinding of the "BRALE" Penetrators to shape and the repeated tests made in our inspection and calibration would cause breakage in any stone having a real flaw and so most careful examination is made of every stone before and during the grinding and polishing. Every "BRALE" Penetrator is, therefore, as sound and durable as selection and inspection can procure. Each is also tested under 200 kg. load.

All diamonds are, however, brittle and they are all possessed of internal strains that cannot be eliminated by annealing and, as they are a natural product and cannot be altered by any improved method of manufacture, it is impossible to prevent diamonds from breaking.

The operator of a "ROCKWELL" Tester may accidentally hit the "BRALE" Penetrator either with steel being tested or with one of the anvils, or may be very careful with the diamond, yet someone else making an occasional test to satisfy a

need or a curiosity may hit the diamond. It is to be realized that a diamond may be broken by accident while it is new quite as readily as when it is old. Even in normal use, the great internal strains of the diamond, released somewhat or modified by having part of the diamond ground away, may cause fractures that cannot be anticipated and cannot be prevented. Some "BRALE" Penetrators last for months while some break soon and there is no way to tell which are going to last the longer nor is there any way to truly determine which have never been accidentally hit in service. Everyone using the "ROCKWELL" Tester on production should keep a spare "BRALE" Penetrator.

All these causes of breakage (every one of them) ARE BEYOND OUR CONTROL, and so we do not and cannot guarantee any definite life for "BRALE" Penetrators. They are expensive to make and a flaw would cause breakage during grinding or test, so there is every natural incentive to select flawless stones to work upon.

The question has been raised whether the charge for "BRALE" Penetrators should be increased so that the excess charge could be used to cover the cost of free replacement in cases of early breakage. Consideration of that matter has shown that it would be inadvisable for the simple reason that "BRALE" Penetrators fail from careless use, accident, difficult application on shapes that shift or slip under the testing pressure, and from the result of natural internal strains. Sometimes even the operator of the machine will not know surely which of these things was responsible for the breakage of some particular "BRALE" Penetrator, and his plant manager may not know, and we certainly cannot know, and Solomon himself would have resigned his bench rather than decide. It is therefore evident that all "BRALE" Penetrators breaking within a certain time would have to be replaced free, and that would work injustice to the careful user and to the plant making tests of pieces of such size and shape as are least likely to cause breakage, for they would be paying for breakage of others whose operators are less careful or whose parts are of such shape as to put the "BRALE" Penetrators under special strain.

It is economically more sound, and more fair under these circumstances, to charge for the "BRALE" Penetrators only what their production cost demands, and that is all we do charge, and it permits of no free replacements. The "BRALE" Penetrator with unusually short life will average in ultimately with another of extra long life.

The shape of the "BRALE" Penetrator is carefully controlled in manufacture by specially built Bausch & Lomb projection equipment, and each "BRALE" Penetrator is given many tests for both calibration and strength.

WARNING is given against use of diamond penetrators not supplied by us. Our Standardizing Laboratory gives an enormous amount of time and careful attention to see that within practicable limits our penetrators are kept interchangeable with all of those supplied during the past 20 years and in accordance with those used when the readings of your Tester were standardized at the time the machine was made. Any departure in the accuracy of the penetrator is quite as bad as an error in the machine itself. Mere optical inspection alone at whatever magnification is entirely inadequate to control standardization of sphero-conical diamond penetrators.

Caution The accuracy of a "ROCKWELL" Tester testing on hard steel cannot be better than the precision in shape of the sphero-conical diamond penetrator. The value to you is in the precision of our work in producing it.

The word BRALE is stamped on the Chuck of every genuine and accurate diamond penetrator for the "ROCKWELL." The word BRALE is registered as a trade mark in the United States Patent Office and abroad. The word BRALE is not stamped until our laboratory has carefully checked the shape and checked readings in a standard machine.

(If you happen to have one of the light load "Superficial" Testers, you will find the letter "N" ahead of the word BRALE).

CARE OF "BRALE" PENETRATOR

(1) When there are a lot of dents in the conical surface of the metal nib, it is evident that the operator who is supposed to be aiming to insert piece below the diamond, having frequently hit the metal *above* the diamond, has hit the diamond itself even more often than the metal above it. That is a reasonable and mathematically true deduction.

These many dents in the conical metal surface show that the operator has frequently hit above the diamond when putting work on the anvil. The diamond, of course, will never show such dents but repeatedly hitting it will knock off its tip.

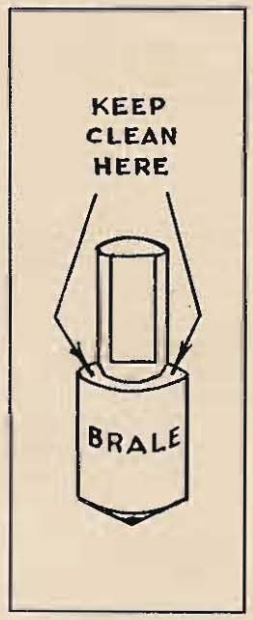

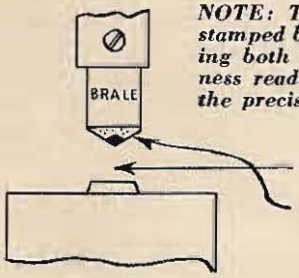

NOTE: The trade mark "BRALE" is stamped by our Laboratory after checking both micrometric shape and hardness readings without which accuracy, the precision of tester is lost.

The piece to be tested is to be slipped in here without hitting the diamond "BRALE" penetrator.

Dents in this conical metal surfaee mean that the diamond is being abused.

We find many penetrators with dents above the diamond among those customers who break the most diamonds. Some people believe that because diamonds are hard they also are not brittle. They are all brittle, so avoid hitting the diamond when putting work into the tester. Diamonds do ultimately fail from repeated pressure but last immeasurably longer when not hit.

(2) Sometimes diamond "BRALE" penetrators give wrong readings on test blocks and are assumed broken, yet upon return to us for allowance in ordering a new one, we find the trouble is not breakage of diamond but bad condition of contact surface where the "BRALE" shoulder butts against bottom of plunger rod of the tester. It is well therefore to examine diamond and shoulder with a strong, small hand magnifying glass before deciding what is at fault.

Whenevcr a penetrator is inserted in thc plunger, the shoulder (as indicated by the two arrows) should always be cleaned either by wiping with a piece of cloth or brushing with a small brush. At the same time, wipe or brush the lowcr face of the plunger where contact is made with the shoulder of the penetrator.

If small particles become embcdded in either of these surfaces, they may be responsible for an error in the rcadings. It is of prime importance to keep these surfaces clean for they must contact one another perfectly, all the way around, as when originally made.

NOTES AND PRECAUTIONS

"ROCKWELL" Hardness Numbers

As hardness numbers are based on the difference between the depths of penetration at major and minor loads, it will be evident that the greater this difference the less the hardness number (beeause there is a reverse scale on the indicator dial) and the softer the material. This difference is automatically registered, when the major load is removed (the minor load still being applied), by the reversed scale on the indicator dial, which thus reads directly "ROCKWELL" hardness numbers.

Preparation of Surfaces

Surfaces that are ridged perceptibly to the eye by rough grinding or coarse machining offer unequal support to the penetrator. The degree of surface refinement, therefore, depends on the accuracy required. When testing bar stock or forgings, it is advisable to remove enough of the surface by grinding or machining so that the penetrator will test the true metal underneath. A fairly smooth surface is necessary for accurate work, so the scale caused in hardening should always be removed before testing. This is particularly true with tool work as it is often necessary to polish the work with a piece of emery cloth before the proper reading can be obtained.

Thickness of Specimens

For aceurate results, the specimen must be of such thickness that the under-surface of the specimen, after testing, does not show the slightest indication of impression. This thickness will vary greatly according to the hardness of the material tested.

Curved Surfaces

Results from tests on a curved surface may be in error and should not be reported without stating the radius of curvature. In testing rounds, the effect of curvature may be eliminated by filing a small flat spot on the specimen.

Chucking the Work

Specimens with much overhang should be so supported that when the minor load is applied the work will be held rigidly. The specimen while under the pressure of the major load must not tip at the edge of the anvil, move laterally, or sink in the anvil.

The surface tested should not depart from the horizontal by more than 7.5 degrees. In testing cylindrical pieces, such as rods, an anvil provided with a V-notch should be used, and the penetrator applied over the axis of the rod. Care should be taken that the specimen lies flat, so as to be supported by the sides of the V directly in line with the penetrator. The undersurface of any specimen, where it rests on the anvil, must be free from scale or burrs that might collapse during the application of the major load.

Although the machine checks correctly with the test blocks, faulty readings may result from testing on a spot previously tested, by testing thin specimens, or by the penetrator resting on two ridges, due to the surface of the work being rough.

In testing hollow pieces, such as tubing which may deform permanently under the load, a blunt nose should first be tried in place of the penetrator, conducting the test in the usual way to see if the specimen takes a permanent set. That is, apply the minor and major loads; then remove major load, whereupon the pointer of the dial gauge should return to zero. If it does not do so, it indicates that the tubing has been permanently deformed and should be supported on the inside.

There is another thing which may prevent the proper testing of tubing without an inside support and that is excessive deformation of the tube as the major load is applied (it makes no difference whether this is permanent deformation or not) which will cause the penetrator to travel to the full extent of its possible movement.

This would prevent the complete application of the load. In such a case a test could not be made without supporting the tube on the inside. If it shows the slightest set the tests will be worthless, and special chucking must be contrived.

Homogeneity of Specimens

The "ROCKWELL" tester measures the hardness of the specimen at the point of penetration, but the reading is also influenced by the hardness of the material under the impression. The effects of penetration extend about 10 times the depth of indentation, so if a softer layer is located in this depth the impression will be deeper and the apparent hardness less. Therefore, due regard for this condition must be had when testing material with a superficial hardness, such as case-hardened work.

To secure the average hardness of materials such as cast iron with graphite particles and some nonferrous metals whose crystalline aggregates are greater than the area of the penetrator, a penetrator of sufficient size may be used to overcome the local or grain hardness.

Precautions

Be careful not to damage the penetrator or the anvil by forcing them together when a specimen is not in the machine.

If used on case-hardened steel, the accurate hardness is not shown unless the hard layer is several times as thick as depth of indentation.

ZEROMINDER DEVICE FOR SPEEDY TESTING

Those who are not familiar with the operation of "ROCKWELL" Testers with the usual type of gauge that has no "Zerominder" device should first operate the tester as described under "Operating the Tester in Brief", not using the "Zerominder" device until they become familiar with the principle of test and the normal method of using the direct reading gauge. Then one may pass on to the use of this short-cut method and use the "Zerominder" in the way set forth in *italics* below.

In the short cut or "Zerominder" method, for speed testing, operator should, as soon as minor load is applied, note the projected exact position of pointer on "Zerominder" device, then immediately trip major load and while that load is being applied should turn zero adjuster to bring the "SET" arrow to the remembered position on "Zerominder" assumed by pointer before it starts to move in response to major load application. The sole function of the "Zerominder" device is as an aid to memory and to fixation of vision so that zeroizing may be done to the pointer's former halted position after the pointer has left that position and is in motion.

In effect, this permits zero adjustment of gauge to be done while the major load is making its indentation and that is what saves time.

The purpose of the "Zerominder" device is to speed up quantity inspection testing.

For tests of extreme accuracy, the "Zerominder" device should be ignored and the dial used in the original manner, exactly as explained under "Operating the Tester in Brief".

"ROCKWELL" Hardness Tester operation requires that dial zeroizing be done for pointer position at conclusion of minor load indentation.

The original, and still for some purposes the preferred method, is to turn bezel of gauge to bring the "SET" mark behind the pointer when minor load has been applied and then to trip the major load. The device marked "Zerominder" is in this method not used at all.

Before starting test see that crank handle is turned forward (counter clockwise) as far as it will go, thereby lifting weights.

INDEX

COLOR SCHEME OF THIS BOOK

Instructions in black apply to all of our testers, Normal and Superficial. Red paragraphs apply only to Normal type having 60, 100 and 150 kg. major loads. Green paragraphs apply only to "Superficial" type having 15, 30 and 45 kg. major loads.

ASSEMBLING INSTRUCTIONS

In carrying a "ROCKWELL" Tester, it should be grasped only by its base, that is, by the cast iron pedestal and never by any parts that are attached to that pedestal.

It should be gently handled notwithstanding its weight. Preferably, take the tester and accessories to where they are to be used (which should be a clean bench in a clean location, free from vibration and free from grit) before starting to assemble the tester.

The following instructions should be carried out in the order in which they are printed. For detailed instructions, look up, in index, subject named in parentheses.

A — Fasten crank handle to right side of tester.

B — Fill the oil dash pot (see "Dash Pot").

C — Hang weight pan and weights on lever (see "Load, Selecting").

D — Place spot anvil in elevating screw (see "Anvils").

E — Put penetrator in plunger (see "Penetrating Point, Selecting").

F — Check the index lever adjustment (see "Index Lever Adjustment").

G — Put our EEL-SKID Oil on the work elevating screw as the oil may have dried if the tester has been long in the packing case or long idle.

H — Level your tester (approximately is sufficient) by placing the plane anvil in position on the elevating screw. On the anvil place a level and rotate it. The tester as built stands correctly on a level bench, so block up if bench is not level. Precision leveling unnecessary.

The tester is now in readiness for making a hardness test. (See "Operating Instructions").

PRINCIPLE OF "ROCKWELL" TEST

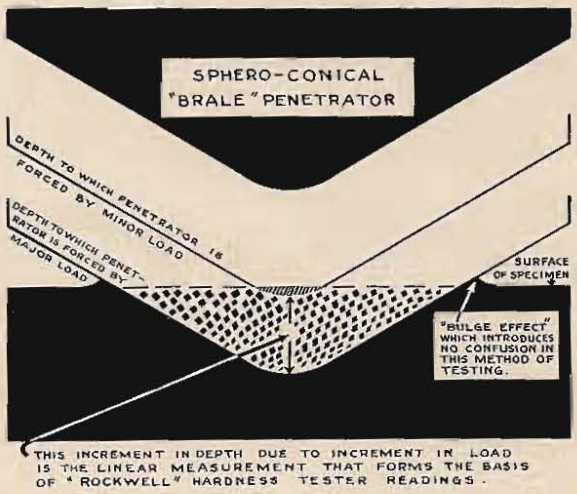

The total depth of penetration is never measured by the "ROCKWELL" and so exact point of first contact between penetrator and specimen is disregarded. The hardness reading is based entirely upon the *increment* of depth of penetration resulting from *increasing* the minor load pressure to major load pressure—a purely automatic accomplishment of the machine itself. As the principle is the same whether the penetrator is the $\frac{1}{16}$" steel ball or the conical diamond "BRALE," the sketch above (which shows the "BRALE" penetrator) indicates the principle of test.

Using both moveable and "Zerominder" scales

1—Place specimen securely upon anvil.

2—Elevate specimen into contact with penetrator and further until *small* pointer of the dial gauge is nearly vertical and slightly to the right of the dot; then still further until *long* pointer points *approximately* vertically upward.

3—Observe the *exact* position of long pointer on fixed, colored, "Zerominder" scale.

4—Tap downward on the depressor bar to apply major load.

5—Turn knurled ring (zero adjuster) with thumb till the "set" arrow on dial is in exactly the same position on "Zerominder" scale you observed in Paragraph 3.

6—When *long* pointer comes to rest, pull crank handle (6) forward, lifting major load, but leaving minor load still applied.

7—Read "ROCKWELL" Hardness Number.

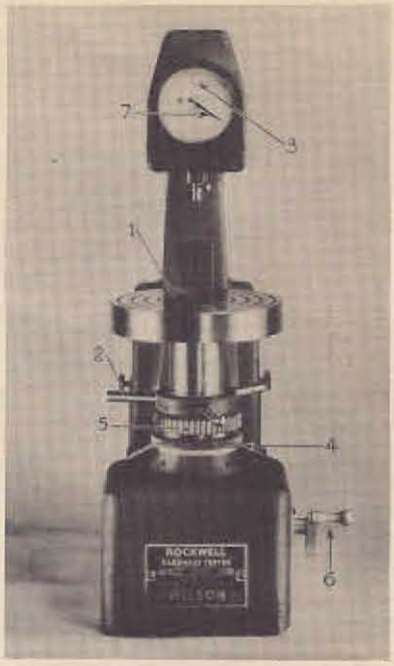

1. Idle positions of long and short pointers and calibrated scale, before specimen has been elevated against penetrator, will be somewhat as shown, though the "SET" arrow at this time may be anywhere, possibly where it is shown in next figure. As soon as penetrator starts to be raised both pointers will move. Keep your eye first on the *short* one.

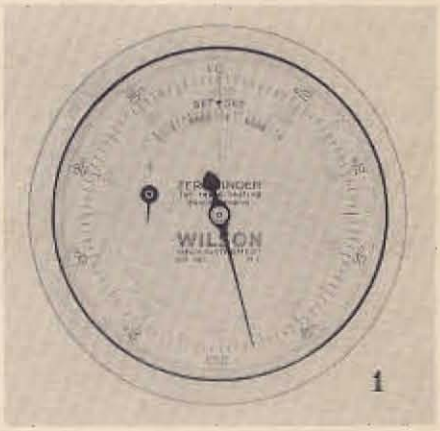

2. Keep watching the short pointer while turning the capstan hand wheel clockwise and proceed till small pointer approaches mark directly above it; then shift your attention to long pointer and cease elevating the specimen when long pointer is approximately vertical. By "approximately" is meant within 10 divisions left or right of exactly vertical. The minor load has been correctly applied. Now observe *very exactly* where long pointer stands on the multicolored, stationary, "Zerominder" markings and keep your eye unfailingly on that point as you press momentarily, with your thumb, down on the bar that releases the major load. The long pointer will then quickly move counter-clockwise as indicated in next illustration.

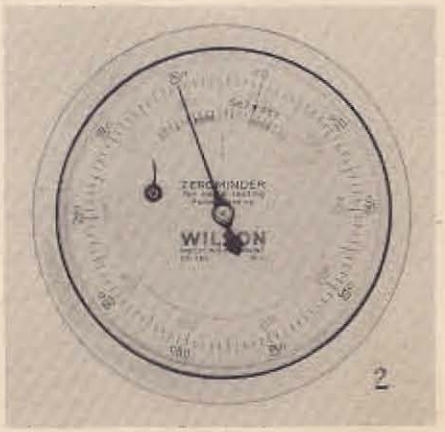

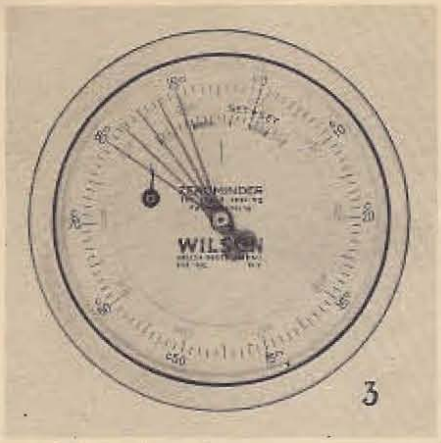

Illustration shows long pointer moving counterclockwise.

3. While *major* load is falling under rate control by dash pot, and long pointer is moving counterclockwise, turn with your thumb the knurled ring under capstan wheel and so move the calibrated dial to bring the "SET" arrow *exactly* pointing to where you previously observed the long pointer's position on the multi-colored "Zerominder" markings. That adjustment zeroizes the dial gauge at bottom of *minor* load indentation. In illustration, pointer is shown beginning its movement and calibrated scale not yet zeroized, i.e., not yet turned.

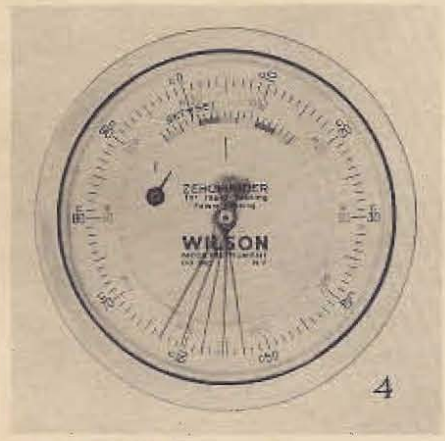

Illustration shows long pointer moving clockwise.

4. Knurled ring under capstan nut has now been turned by thumb as the means of rotating the calibrated dial of indicator and the arrow marked "set" has been brought to the exact position on the "Zerominder" markings that the long pointer indicated before *major* load was released. The dial could be so moved before releasing the major load, but it saves time to note the exact "Zerominder" point and so do the dial setting while major load is falling. Illustration shows long pointer after its extreme movement counterclockwise (due both to penetration of specimen and spring of frame and specimen under testing load) and now in clockwise retreat as load is removed, by turning crank handle.

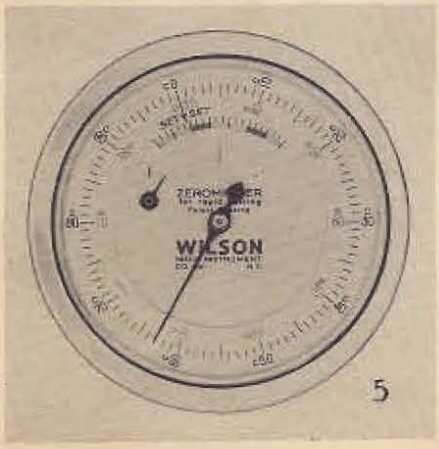

5. Illustration shows pointer at rest after it moved, first counterclockwise as *major* load was applied, and second after its retreat clockwise due to load removal. As dial has now been properly set for zero this final fixed position of pointer is due to increase of depth of indentation by increasing from *minor* to *major* load. It now indicates the hardness number which having been noted the operator can lower and remove the specimen.

The "ROCKWELL" Hardness Tester accomplishes a test which in principle is represented by this series of sketches

observe the important fact that the depth measurement does not employ the surface of the specimen as the zero reference point and so largely eliminates surface condition as a factor.

NOTE - The scale of the dial is reversed so that a deep impression gives a low reading and a shallow impression a high reading; so that a high number means a hard material.

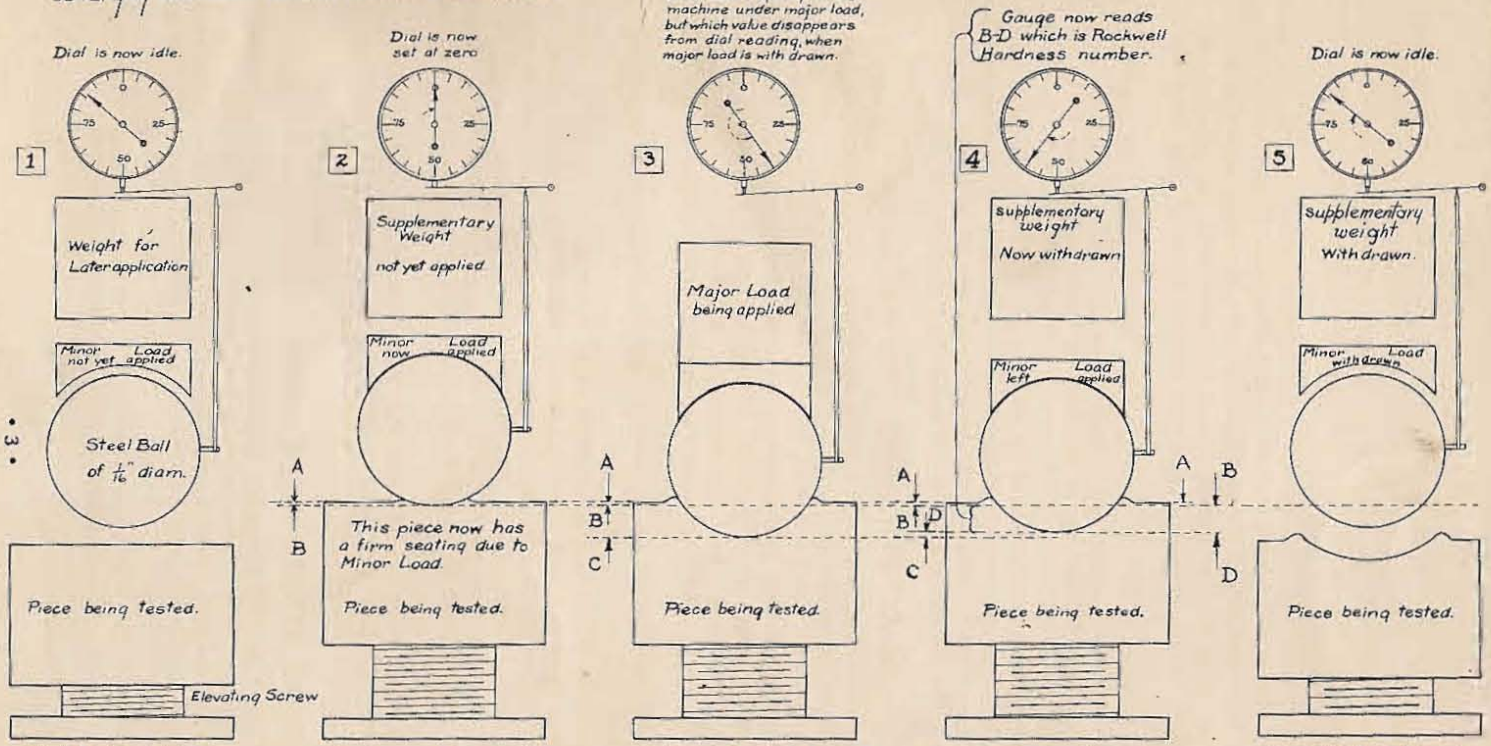

EXPLANATION -

Diagrammatically the cycle of operation of the Rockwell Direct-Reading Hardness Tester is here shown. To illustrate the principle and show the action of the ball under application and release of minor and major loads, the size of the 1/16" ball has been enormously exaggerated.

A-B = Depth of hole made by Minor Load

A-C = Depth of hole made by Major Load

D-C = Recovery of metal upon reduction of Major to Minor Load. This is an index of the elasticity of metal under test, and does not enter the hardness reading.

B-D = Difference in depth of holes made = Rockwell Hardness number.

SELECTING PENETRATING POINT—Normal Tester

NOTE.—There is no "ROCKWELL" hardness denoted by a figure alone. It must always be prefixed by the scale letter, a list of which is given further on. (See "Scales.")

Every "ROCKWELL" Tester is supplied with a $\frac{1}{16}$" steel ball held in a chuck.

The $\frac{1}{16}$" ball is used in conjunction with the 100 kilogram load, for testing such materials as brass, bronze and soft steel, or for hard steel that has been well temper drawn. All readings with $\frac{1}{16}$" ball and 100 kg. load are B readings and the letter B must be prefixed to the numerals.

The diamond sphero-conical test point, or "BRALE" Penetrator as it is called, is not a part of the regular equipment of the "ROCKWELL" Tester, but is a separate attachment. It is necessary to use this cone test point in conjunction with 150 kilogram load for testing hardened steels or any very hard metal. All readings with the "BRALE" and 150 kg. load are C readings and the letter C must be prefixed to the numerals.

Special penetrators of ⅛", ¼" and ½" balls will be supplied on request at an extra charge. These are sometimes useful for testing soft material and the scale designation depending on the size of ball and the load used is given under "Scales —Normal Tester."

After having had any of the chucks out and replacing them, or after putting a new steel ball in the chuck, go through the operations of making a test on a piece of brass or soft steel to set the chuck properly before attempting to take observed readings. Repeat this operation two or three times, to seat the chuck firmly.

SELECTING LOAD—Normal Tester

Two weights are supplied; these rest on the weight pan. One of them has red markings and the other black.

Three different loads can be applied, namely, 60, 100 and 150 kilograms.

To apply the 60 kg. load: the tester has been calibrated so that the power lever (which is also the weight arm) together with the link and weight pan apply a load of 60 kg. (i.e., with neither of the two weights on the pan).

To apply the 100 kg. load: the weight with the red characteristics is placed on the weight pan.

To apply the 150 kg. load: the weight with the black characteristics is added to the other weight.

The separate black weight is never used alone, but only in conjunction with the other weight or weights. It will be noticed that in making tests with the 100 kg. load where the dial scale with the RED figures is used, the weight applying this load is the "RED" one, while in making tests with the 150 kg. load where the dial scale with the BLACK figures is used, the "BLACK" weight is on top of the "RED" weight.

The 60 kg. load is applied by the weight pan alone, without either of the separate weights.

The 60 kg. load is also employed with the conical Diamond "BRALE" Penetrator for testing extremely hard metal, such as tungsten carbide alloys. With $\frac{1}{16}$" ball it is extensively used for sheet brass.

SELECTING PENETRATING POINT—Superficial Tester

Readings taken on the "Rockwell" Superficial Hardness Tester should never be recorded by figures alone. The hardness number should always be prefixed by the figures indicating the major load used, followed by the letter T if the $\frac{1}{16}$" ball penetrator has been used, or the letter N if the test has been made with the N "BRALE" Penetrator.

Every "Rockwell" Tester is supplied with a $\frac{1}{16}$" steel ball penetrator. This is used for testing relatively soft materials such as brass, bronze and soft steel.

There are no natural standards of hardness.

Accuracy of "ROCKWELL" Testers can be preserved only by using accurately shaped penetrators.

We spend a great deal in time, care and money to maintain microscopic and micrometric accuracy of "BRALE" penetrators, without which your tester would become comparatively useless.

Be sure that you have always at hand a supply of test blocks in fit condition for use in checking your "ROCKWELL" Tester.

Printed in the United States of America

TABLES

OF

BRINELL HARDNESS NUMBERS

AKTIEBOLAGET R ALMKVIST & CO

Gustafsvägen 9 B, S-633 46 Eskilstuna, Sweden

tel. 016 - 12 03 80, telex 46074 TUNA S

TABLES

OF

BRINELL HARDNESS NUMBERS

AKTIEBOLAGET R ALMKVIST & CO
Gustafsvägen 9 B, S-633 46 Eskilstuna, Sweden
tel. 016 - 12 03 80, telex 46074 TUNA S

BRINELL HARDNESS

for 10 mm Ball

Diameter of impression mm	H_B for the loads 3000 kg	1000 kg	500 kg	250 kg	Diameter of impression mm	H_B for the loads 3000 kg	1000 kg	500 kg	250 kg
1,61	1464	488	244	122	2,06	890	297	148	74,2
1,62	1446	482	241	121	2,07	882	294	147	73,5
1,63	1428	476	238	119	2,08	873	291	146	72,8
1,64	1411	470	235	117	2,09	865	288	144	72,1
1,65	1393	464	232	116	2,10	856	285	143	71,4
1,66	1377	459	229	114	2,11	848	283	141	70,7
1,67	1360	453	227	113	2,12	840	280	140	70,0
1,68	1344	448	224	112	2,13	832	277	139	69,4
1,69	1328	443	221	111	2,14	824	275	137	68,7
1,70	1312	437	219	109	2,15	817	272	136	68,1
1,71	1297	432	216	108	2,16	809	270	135	67,4
1,72	1282	427	214	107	2,17	802	267	134	66,8
1,73	1267	422	211	106	2,18	794	265	132	66,2
1,74	1252	417	209	104	2,19	787	262	131	65,5
1,75	1238	413	206	103	2,20	780	260	130	65,0
1,76	1223	408	204	102	2,21	772	257	129	64,4
1,77	1210	403	202	101	2,22	765	255	128	63,8
1,78	1196	399	199	99,7	2,23	758	253	126	63,2
1,79	1183	394	197	98,5	2,24	752	251	125	62,6
1,80	1169	390	195	97,4	2,25	745	248	124	62,1
1,81	1156	385	193	96,4	2,26	738	246	123	61,5
1,82	1144	381	191	95,3	2,27	732	244	122	61,0
1,83	1131	377	188	94,2	2,28	725	242	121	60,4
1,84	1119	373	186	93,2	2,29	719	240	120	59,9
1,85	1106	369	184	92,2	2,30	712	237	119	59,4
1,86	1094	365	182	91,2	2,31	706	235	118	58,8
1,87	1083	363	180	90,2	2,32	700	233	117	58,3
1,88	1071	357	179	89,3	2,33	694	231	116	57,8
1,89	1060	353	177	88,3	2,34	688	229	115	57,3
1,90	1048	349	175	87,4	2,35	682	227	114	56,8
1,91	1037	346	173	86,5	2,36	676	225	113	56,3
1,92	1027	342	171	85,6	2,37	670	223	112	55,9
1,93	1016	339	169	84,7	2,38	665	222	111	55,4
1,94	1005	335	168	83,8	2,39	659	220	110	54,9
1,95	995	332	166	82,9	2,40	653	218	109	54,4
1,96	985	328	164	82,1	2,41	648	216	108	54,0
1,97	975	325	162	81,2	2,42	643	214	107	53,5
1,98	965	322	161	80,4	2,43	637	212	106	53,1
1,99	955	318	159	79,5	2,44	632	211	105	52,7
2,00	945	315	158	78,8	2,45	627	209	104	52,2
2,01	936	312	156	78,0	2,46	621	207	104	51,8
2,02	926	309	154	77,2	2,47	616	205	103	51,4
2,03	917	306	153	76,4	2,48	611	204	102	50,9
2,04	908	303	151	75,7	2,49	606	202	101	50,5
2,05	899	300	150	74,9	2,50	601	200	100	50,1

Note.—These tables are correct for a ball of 1 mm. diameter if the decimal point in the value of the loads is moved two places to the left i.e. 30, 10, 5 and 2.5 kg